MTS Criterion® Series 40

Product Information

be certain.

100-231-445 C

Software validation and verification

MTS software is developed using established quality practices in accordance with the requirements detailed in the ISO 9001 standards. Because MTS-authored software is delivered in binary format, it is not user accessible. This software will not change over time. Many releases are written to be backwards compatible, creating another form of verification.

The status and validity of MTS' operating software is also checked during system verification and routine calibration of MTS hardware. These controlled calibration processes compare the final test results after statistical analysis against the predicted response of the calibration standards. With these established methods, MTS assures its customers that MTS products meet MTS' exacting quality standards when initially installed and will continue to perform as intended over time.

Publication information

Manual Part Number	Publication Date
100-231-445 A	**January 2011**
100-231-445 B	**March 2012**
100-231-445 C	**June 2014**

Contents

Operation 101

Maintenance 117

Troubleshooting 121

Decommissioning 123

Appendix 125

Electromechanical Load Unit Maintenance and Service Logs 127

Declaration of Conformity 135

Technical Support

How to Get Technical Support

Start with your manuals

The manuals supplied by MTS provide most of the information you need to use and maintain your equipment. If your equipment includes software, look for online help and README files that contain additional product information.

If you cannot find answers to your technical questions from these sources, you can use the Internet, e-mail, telephone, or fax to contact MTS for assistance.

Technical support methods

MTS provides a full range of support services after your system is installed. If you have any questions about a system or product, contact Technical Support in one of the following ways.

Outside the U.S.

For technical support outside the United States, contact your local sales and service office. For a list of worldwide sales and service locations and contact information, use the Global MTS link at the MTS web site:

> www.mts.com > About MTS Systems > Global Presence (choose your region in the right-hand column) > (choose the location closest to you)

Before You Contact MTS Service Representative

MTS can help you more efficiently if you have the following information available when you contact us for support.

Know your contact number and system number

The contact number contains your company number and identifies your equipment type (such as material testing or simulation). The number is typically written on a label on your equipment before the system leaves MTS. If you do not know your MTS contact number, contact your sales engineer.

When you have more than one MTS system, the system model number and series number identifies your system. You can find your these number in your order paperwork or directly on your equipment.

Identify the problem

Describe the problem and know the answers to the following questions:

- How long and how often has the problem occurred?
- Can you reproduce the problem?
- Were any hardware or software changes made to the system before the problem started?
- What are the equipment model numbers?
- What is the controller model (if applicable)?
- What is the system configuration?

Know relevant computer information

For a computer problem, have the following information available:

- Manufacturer's name and model number
- Operating software type and service patch information
- Amount of system memory
- Amount of free space on the hard drive where the application resides
- Current status of hard-drive fragmentation
- Connection status to a corporate network

Know relevant software information

For software application problems, have the following information available:

- The software application's name, version number, build number, and (if available) software patch number. This information can typically be found in the **About** selection in the **Help** menu.
- The names of other applications on your computer, such as:
  - Anti-virus software
  - Screen savers
  - Keyboard enhancers
  - Print spoolers
  - Messaging applications

If You Contact MTS by Phone

A Call Center agent registers your call before connecting you with a technical support specialist. The agent asks you for your:

- Contact number
- Name
- Company name
- Company address
- Phone number where you can be reached

If your issue has a notification number, please provide that number. A new issue will be assigned a unique notification number.

Identify system type

To enable the Call Center agent to connect you with the most qualified technical support specialist available, identify your system as one of the following types:

- Electromechanical material test system
- Hydromechanical material test system
- Vehicle test system
- Vehicle component test system
- Aero test system

Be prepared to troubleshoot

Prepare to perform troubleshooting while on the phone:

- Call from a telephone close to the system so that you can implement suggestions made over the phone.
- Have the original operating and application software media available.
- If you are not familiar with all aspects of the equipment operation, have an experienced user nearby to assist you.

Write down relevant information

In case Technical Support must call you:

- Verify the notification number.
- Record the name of the person who helped you.
- Write down any specific instructions.

After you call

MTS logs and tracks all calls to ensure that you receive assistance for your problem or request. If you have questions about the status of your problem or have additional information to report, please contact Technical Support again and provide your original notification number.

Preface

Before You Begin

Safety first!

Before you use your MTS product or system, read and understand the *Safety* manual and any other safety information provided with your system. Improper installation, operation, or maintenance can result in hazardous conditions that can cause severe personal injury or death, or damage to your equipment and specimen. Again, read and understand the safety information provided with your system before you continue. It is very important that you remain aware of hazards that apply to your system.

Other MTS manuals

In addition to this manual, you may receive additional manuals in paper or electronic form.

Manuals located on the product information CD will contain information that pertains to your test system, such as:

- Hydraulic and/or mechanical accessory manuals
- Assembly drawings
- Parts lists
- Operation instructions
- Preventive maintenance tasks

Controller and application software manuals are typically included on the software CD distribution disc(s).

Conventions

Documentation Conventions

The following paragraphs describe some of the conventions that are used in your MTS manuals.

Hazard conventions

Hazard notices may be embedded in this manual. These notices contain safety information that is specific to the activity to be performed. Hazard notices immediately precede the step or procedure that may lead to an associated hazard. Read all hazard notices carefully and follow all directions and recommendations. Three different levels of hazard notices may appear in your manuals. Following are examples of all three levels.

Note *Refer to "Safety" on page 13 for general safety information.*

DANGER

Danger notices indicate the presence of a hazard with a high level of risk which, if ignored, *will* result in death, severe personal injury, or substantial property damage.

WARNING

Warning notices indicate the presence of a hazard with a medium level of risk which, if ignored, *can* result in death, severe personal injury, or substantial property damage.

CAUTION

Caution notices indicate the presence of a hazard with a low level of risk which, if ignored, *could* cause moderate or minor personal injury or equipment damage, or could endanger test integrity.

Notes

Notes provide additional information about operating your system or highlight easily overlooked items. For example:

Note *Resources that are put back on the hardware lists show up at the end of the list.*

Special terms

The first occurrence of special terms is shown in *italics*.

Illustrations

Illustrations appear in this manual to clarify text. They are examples only and do not necessarily represent your actual system configuration, test application, or software.

Electronic manual conventions

This manual is available as an electronic document in the Portable Document File (PDF) format. It can be viewed on any computer that has Adobe Acrobat Reader installed.

Hypertext links

The electronic document has many hypertext links displayed in a blue font. All blue words in the body text, along with all contents entries and index page numbers, are hypertext links. When you click a hypertext link, the application jumps to the corresponding topic.

Safety

General Safety Practices

This section provides information about safety issues that pertain to electromechanical systems in general. These issues include statements to the intended use and foreseeable misuse of the system, the hazard zone, definition for the graphical hazard labeling that is affixed to your product, and other (more general) safety information that relates to the high-performance characteristics of MTS Criterion electromechanical systems.

MTS Criterion test systems are designed to generate motions and forces and impart these motions and forces into a test specimen.

When you prepare to operate the system and during system operation, ensure the following:

- Do not use or allow personnel to operate the system who are not experienced, trained, or educated in the inherent dangers associated with high-performance electromechanical machines and who are not experienced, trained, or educated with regard to the intended operation as it applies to this test system.
- Do not disable safety components or features (including limit detectors, light curtains, or proximity switches/detectors).
- Do not attempt to operate the system without appropriate personal safety gear (for example, hearing, hand, and eye protection).
- Do not use specimens that are combustible, flammable, pressurized, or explosive.
- Whenever possible, use tongs or similar device to handle specimens during specimen installation.
- Do not use humans as specimens or allow humans to ride in or on the test specimen or the test system for any purpose unless the system is man-rated and all associated safety conditions are strictly enforced.
- Do not modify the system or replace system components using parts that are not MTS component parts or effect repairs using parts or components that are not manufactured to MTS specifications.
- Do not operate the system in an explosive atmosphere.
- Do not use the system in a test area where uncontrolled access to the test system is allowed when the system is in operation.

If you have system related responsibilities (that is, if you are an operator, service engineer, or maintenance person), you should study safety information carefully before you attempt to perform any test system procedure.

You should receive training on this system or a similar system to ensure a thorough knowledge of your equipment and the safety issues that are associated with its use. In addition, you should gain an understanding of system functions by studying the other manuals supplied with your test system. Contact MTS for information about the content and dates of training classes that are offered.

It is very important that you study the following safety information to ensure that your facility procedures and the system's operating environment do not contribute to or result in a hazardous situation. Remember, you cannot eliminate all the hazards associated with this system, so you must learn and remain aware of the hazards that apply to your system at all times. Use these safety guidelines to help learn and identify hazards so that you can establish appropriate training and operating procedures and acquire appropriate safety equipment (such as gloves, goggles, and hearing protection).

Each test system operates within a unique environment which includes the following known variables:

- Facility variables (facility variables include the structure, atmosphere, and utilities)
- Unauthorized customer modifications to the equipment
- Operator experience and specialization
- Test specimens

Because of these variables (and the possibility of others), your system can operate under unforeseen circumstances that can result in an operating environment with unknown hazards.

Improper installation, operation, or maintenance of your system can result in hazardous conditions that can cause death, personal injury, or damage to the equipment or to the specimen. Common sense and a thorough knowledge of the system's operating capabilities can help to determine an appropriate and safe approach to its operation.

Safety Practices Before System Operation

Before you apply power to the test system, review and complete all of the safety practices that are applicable to your system. The goal, by doing this, is to improve the safety awareness of all personnel involved with the system and to maintain, through visual inspections, the integrity of specific system components.

Read all manuals

Study the contents of this manual and the other manuals provided with your system before attempting to perform any system function for the first time. Procedures that seem relatively simple or intuitively obvious can require a complete understanding of system operation to avoid unsafe or dangerous situations.

Locate and read hazard placards/labels

Find, read, and follow the hazard placard instructions located on the equipment. These placards are placed strategically on the equipment to call attention to areas such as known crush points and electrical voltage hazards.

Locate lockout/tagout points

Know where the lockout/tagout point is for all of the supply energies associated with your system. This includes the hydraulic, pneumatic, electric, and water supplies (as appropriate) for your system to ensure that the system is isolated from these energies when required.

Know facility safe procedures

Most facilities have internal procedures and rules regarding safe practices within the facility. Be aware of these safe practices and incorporate them into your daily operation of the system.

Locate Emergency Stop buttons

Know the location of all the system **Emergency Stop** buttons so that you can stop the system quickly in an emergency. Ensure that an **Emergency Stop** button is located within 2 meters (6 feet) of the operator at all times.

Know controls

Before you operate the system for the first time, make a trial run through the operating procedures with the power off. Locate all hardware and software controls and know what their functions are and what adjustments they require. If any control function or operating adjustment is not clear, review the applicable information until you understand it thoroughly.

Have first aid available

Accidents can happen even when you are careful. Arrange your operator schedules so that a properly trained person is always close by to render first aid. In addition, ensure that local emergency contact information is posted clearly and in sight of the system operator.

Know potential crush and pinch points

Be aware of potential crush and pinch points on your system and keep personnel and equipment clear of these areas.

Know electrical hazards

When the system electrical power is turned on, minimize the potential for electrical shock hazards. Wear clothing and use tools that are properly insulated for electrical work. Avoid contact with exposed wiring or switch contacts.

Whenever possible, turn off electrical power when you work on or in proximity to any electrical system component. Observe the same precautions as those given for any other high-voltage machinery.

Keep bystanders safely away

Keep bystanders at a safe distance from all equipment. Never allow bystanders to touch specimens or equipment while the test is running.

Wear proper clothing

Do not wear neckties, shop aprons, loose clothing or jewelry, or long hair that could get caught in equipment and result in an injury. Remove loose clothing or jewelry and restrain long hair.

Remove flammable fluids from test specimen

Remove flammable fluids from their containers or from components before you install the container or component in a test system. If desired, you can replace the flammable fluid with a non-flammable fluid to maintain the proper proportion of weight and balance.

Check bolt ratings and torques

To ensure a reliable product, fasteners (such as bolts and tie rods) used in MTS manufactured systems are torqued to specific requirements. Over torquing or under torquing a fastener can create a hazardous situation due to the high forces and pressures present in MTS test systems.

On rare occasions, a fastener can fail even when it is correctly installed. Failure usually occurs during torquing, but it can occur several days later. Failure of a fastener can result in a high velocity projectile. Therefore, it is a good practice to avoid stationing personnel in line with or below assemblies that contain large or long fasteners.

Practice good housekeeping

Keep the floors in the work area clean. Do not leave tools, fixtures, or other items not specific to the test, lying about on the floor, system, or decking.

Protect hoses and cables

Protect electrical cables from excessive temperatures that can cause the cables to harden and eventually fail. Ensure that all cables have appropriate strain relief devices installed at the cable and near the connector plug. Do not use the connector plug as a strain relief.

Protect all system hoses and cables from sharp or abrasive objects that can cause the hose or cable to fail. Never walk on hoses or cables or move heavy objects over them. Consider system layout and route hoses and cables away from areas that expose them to possible damage.

When removing hydraulic hoses for equipment repair or changing testing components (for example, hydraulic grips), make sure to cap the hose ends to avoid spilling hydraulic fluid.

Record changes

If you change any operating procedure, write the change and the date of the change in the appropriate manual.

Provide test area guards

Use protective guards such as cages, enclosures, and special laboratory layouts when you work with hazardous test specimens (for example, brittle or fragmenting materials or materials that are internally pressurized).

Do not disable safety devices

Your system might have active or passive safety devices installed to prevent system operation if the device indicates an unsafe condition. Do not disable such devices as it can result in unexpected system motion.

Use appropriately sized fuses

Whenever you replace fuses for the system or supply, ensure that you use a fuse that is appropriately sized and correctly installed. Undersized or oversized fuses can result in cables that overheat and fuses that explode. Either instance creates a fire hazard.

Provide adequate lighting

Ensure adequate lighting to minimize the chance of operation errors, equipment damage, and personal injury. You need to see what you are doing.

Provide means to access out-of-reach components

Make sure you can access system components that might be out of reach while standing on the floor. For example, ladders or scaffolding might be required to reach load cell connectors on tall load units.

Ensure equipment is secure

Make sure the equipment is secure or provide vibration isolation. Some testing can be performed at resonant frequencies that might cause the equipment to vibrate and move during testing.

Perodically run consistancy checks

Pressing the **Emergency-Stop** button causes the system to automatically run a consistency check. The **Emergency-Stop** button should be pressed occasionally to run the constancy check.

Safety Practices While the System Is in Operation

Wear appropriate personal protection

Wear eye protection when you work with electromechanical testing machines, breakable specimens, or when anything characteristic to the specimen could break apart.

Wear ear protection when you work near electric motors, pumps, or other devices that generate high noise levels. Some systems can create sound pressure levels that exceed 70 dbA during operation.

Wear appropriate personal protection equipment (gloves, boots, suits, respirators) whenever you work with fluids, chemicals, or powders that can irritate or harm the skin, respiratory system, or eyes.

Provide test area guards

Use protective guards such as cages, enclosures, and special laboratory layouts when you work with hazardous test specimens (for example, brittle or fragmenting materials or materials that are internally pressurized).

Expect specimen temperature changes

During cyclic testing, the specimen temperature can become hot enough to cause burns. Wear personal protection equipment (gloves) when handling specimens.

Handle chemicals safely

Whenever you use or handle chemicals (for example, cleaning fluids, hydraulic fluid, batteries, contaminated parts, electrical fluids, and maintenance waste), refer to the appropriate MSDS documentation for that material and determine the appropriate measures and equipment required to handle and use the chemical safely. Ensure that the chemical is disposed of appropriately.

Know system interlocks

Interlock devices should always be used and properly adjusted. Interlock devices are designed to minimize the chance of accidental damage to the test specimen or the equipment. Test all interlock devices for proper operation immediately before a test. Do not disable or bypass any interlock devices as doing so could allow crosshead movement regardless of the true interlock condition.

Know system limits

Never rely on system limits, such as mechanical limits or software limits, to protect you or any personnel. System limits are designed to minimize the chance of accidental damage to test specimens or to equipment. Test all limits for proper operation immediately before a test. Always use these limits and adjust them properly.

Do not disturb sensors

Do not bump, wiggle, adjust, disconnect, or otherwise disturb a sensor (such as an accelerometer or extensometer) or its connecting cable when power is applied.

Ensure secure cables

Do not change any cable connections when electrical power is applied. If you attempt to change a cable connection while the system is in operation, an open control loop condition can result. An open control loop condition can cause a rapid, unexpected system response which can result in severe personal injury, death, or damage to equipment. Also, ensure that all cables are connected after you make any changes in the system configuration.

Stay alert

Avoid long periods of work without adequate rest. In addition, avoid long periods of repetitious, unvarying, or monotonous work because these conditions can contribute to accidents and hazardous situations. If you are too familiar with the work environment, it is easy to overlook potential hazards that exist in that environment.

Stay clear of moving equipment/avoid crush points

Stay clear of mechanical linkages, connecting cables, and hoses that move because you can get pinched, crushed, tangled, or dragged along with the equipment. High forces generated by the system can pinch, cut, or crush anything in the path of the equipment and cause serious injury. Stay clear of any potential crush points. Most test systems can produce sudden, high-force motion. Never assume that your reactions are fast enough to allow you to escape injury when a system fails.

Know the causes of unexpected crosshead motions

The high force and velocity capabilities of MTS systems can be destructive and dangerous (especially if crosshead motion is unexpected). The most likely causes of unexpected crosshead response are operator error and equipment failure due to damage or abuse (such as broken, cut, or crushed cables and hoses; shorted wires; overstressed feedback devices; and damaged components within the control loop). Eliminate any condition that could cause unexpected crosshead motion.

Do not use RF transmitters

Keep radio frequency (RF) transmitters away from the workstation computers, remote terminals, and electronics consoles. Intense RF fields can cause erratic operation of the more sensitive circuits in the system.

Hazard Labels

The following hazard labels and icons are located on the test frame.

LABEL	DESCRIPTION
	Lift the machine upright.
	Moving parts present. Moving parts can crush and cut. Keep hands away from moving parts.

LABEL	DESCRIPTION
	Flying objects. Danger of eye injury. Wear safety glasses.
	Tip over hazard. Use outriggers when machine is standalone.
	Do not start, operate, or service machine until you read and understand the operator's manual. Failure to do so could result in serious injury.
	There are no customer-serviceable parts on the MTS Criterion electromechanical frames.
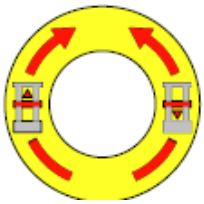	To turn the pulley, manually move the crosshead upward and downward. Pulleys can be turned by hand when power is disabled.

WEEE

The Waste Electrical and Electronic Equipment (WEEE) symbol () means that the controller and its electronic parts must not be disposed of as unsorted municipal waste. Proper disposal is required by approved electronic waste collection agencies. Customers in the EC region who desire to return an end-of-life controller and its electronic parts are encouraged to contact your local MTS Systems Sales/Service Offices for instructions.

Introduction

About This Manual

Purpose

The purpose of this manual is to help you understand your testing system, its capabilities, and operating requirements. This manual provides information for all MTS Criterion Series 40 Material Test system, from the lowest force model (1 kN), to the highest (600 kN). Read each section carefully and refer to the manual whenever you need assistance.

Inappropriate Use

Before you attempt to use the MTS Criterion Series 40 Material Test System, read and understand this manual. Improper installation or operation of this product can result in hazardous conditions that can cause severe personal injury or death, and damage your equipment and specimen.

Contents

Description

Every MTS Criterion Series 40 Material Test System is comprised of a load frame, electronic frame controller, and testing software.

The load frame has a rectangular shape and includes a base unit and one or two vertical columns. The two-column models have a fixed upper transverse beam. The moving crosshead is driven by precision ball screws on the load frame. The crosshead is coupled to the ball screw(s) with high-strength, precision ball nuts and rides on the ball bearings. This configuration is very efficient in minimizing friction and wear. The ball screws are preloaded. This feature removes the backlash so that position can be measured with increased accuracy over non-preloaded ball screws.

The load frame drive is located in the frame base. The drive motor is connected to the lower end of the ball screws by a series of belts and drive pulleys. On the two-column machines, motor rotation causes synchronous rotation of the ball screws, which causes the crosshead to move up or down. On the single-column machines, motor rotation causes the rotation of the single ball screw, which causes the crosshead to move up or down.

Frame Controller

The frame controller is responsible for the following:

- Provides main data and signal processing power.
- Detects the activation of limit switches.
- Provides the interface between the software (computer) and the frame.
- Provides digital servocontrol for speed and position accuracy.
- Automatically identifies accessories, including load cells and extensometers, with the self-identify feature.
- Communicates with the handset.
- Provides programmable data acquisition rate (up to 1000 Hz maximum).
- Commands the motor.

Software

MTS testing software has various method templates available. The method templates in the General Testing Package provide a starting point in configuring test methods that conform to your testing needs. The General Testing Package is separated into four specific testing categories:

- MTS Tensile
- MTS Compression
- MTS Flex
- MTS Peel-Tear

Many additional features can be purchased to meet your company's specific needs. Some of these features might already be part of the system you ordered, or they can be added to your system as your requirements change. Refer to the testing software manual for additional information.

Load Frame Components

The following figures show the various components for the single-column and two-column load frames. To familiarize yourself with the various components of your frame, refer to the figure that shows your model number.

For dimensions, see the specification tables in the "Specifications" on page 35.

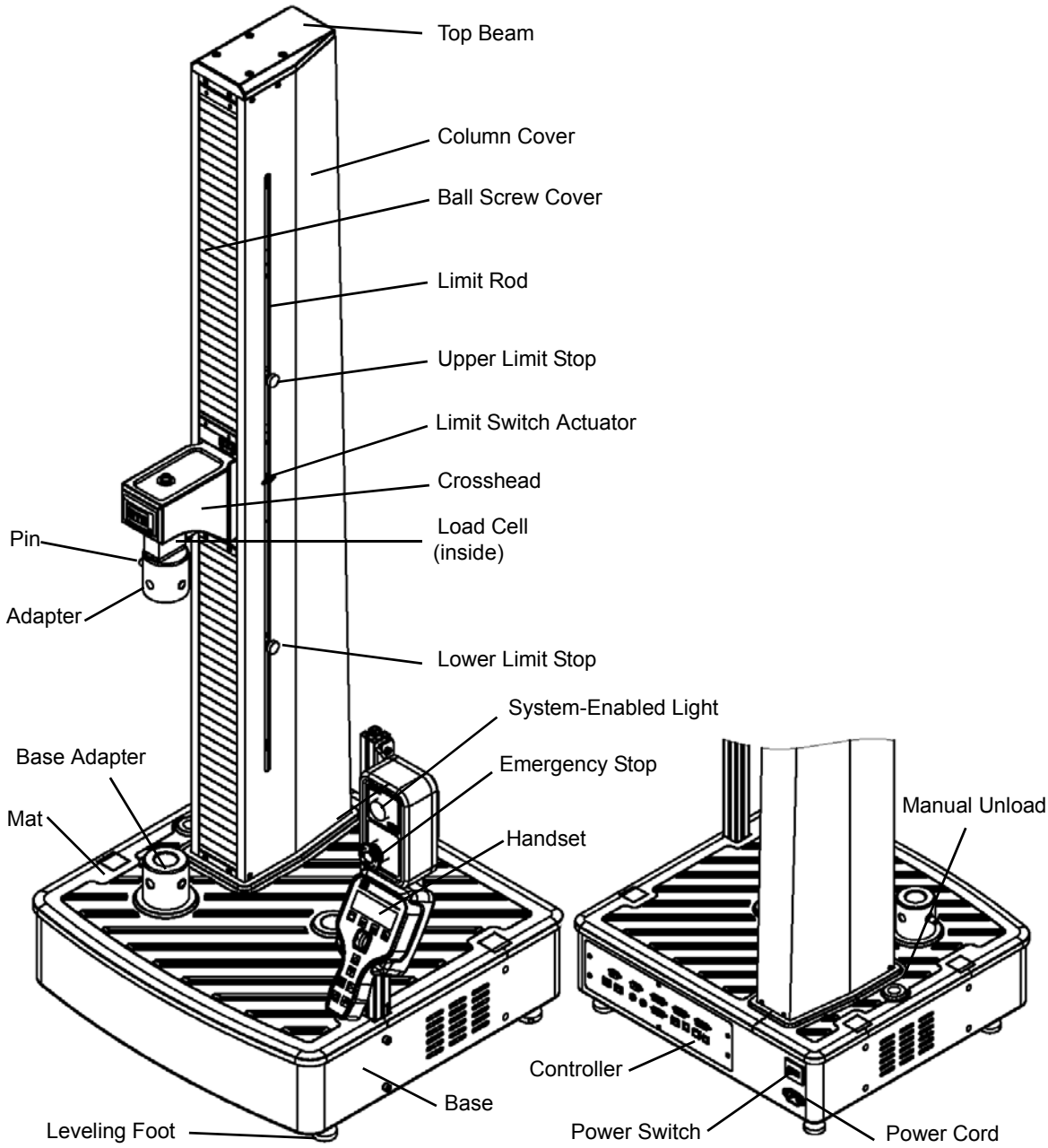

Model C41.103 - Rated Force Capacity 1 kN

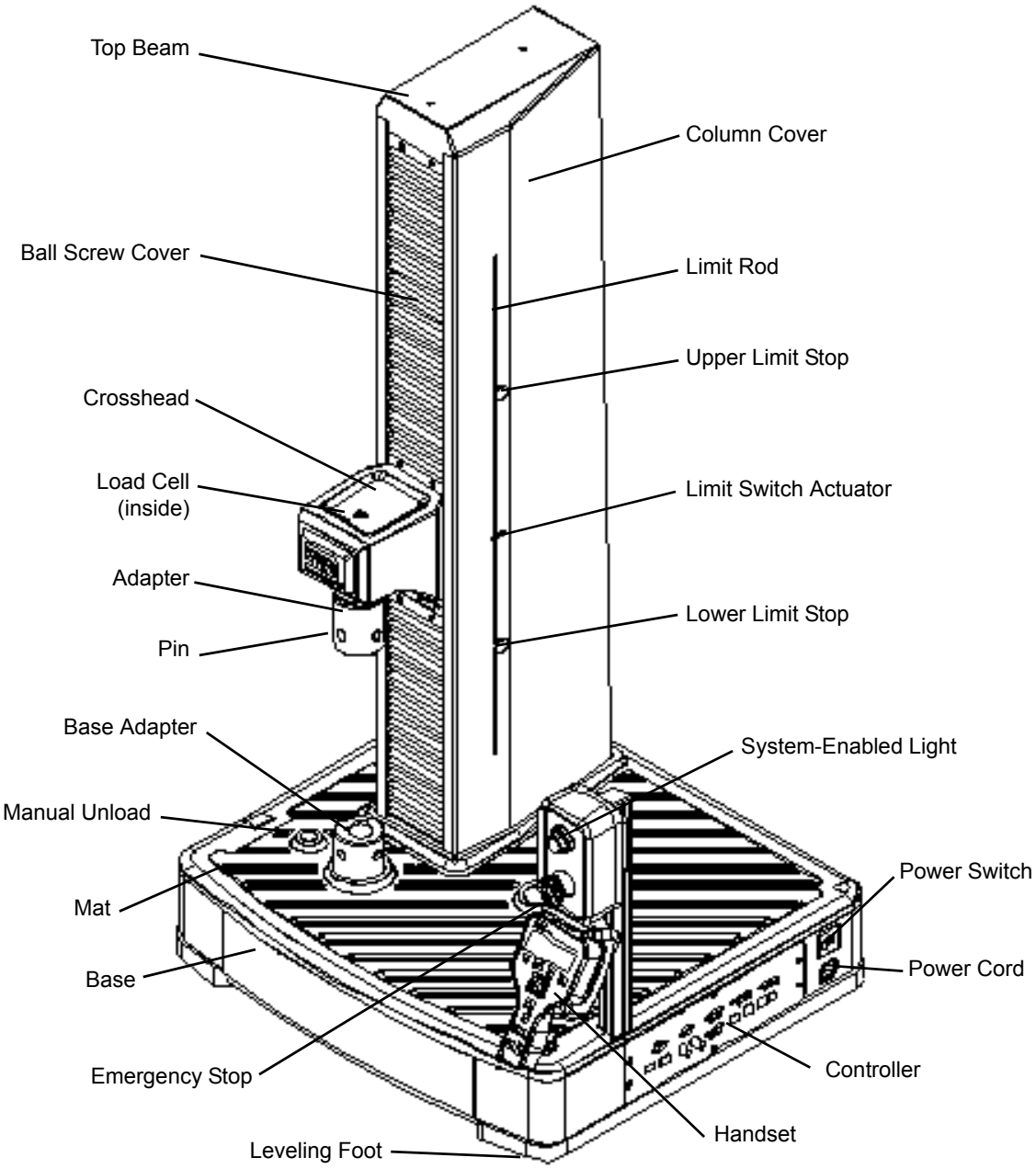

Model C42.503 - Rated Force Capacity 5 kN

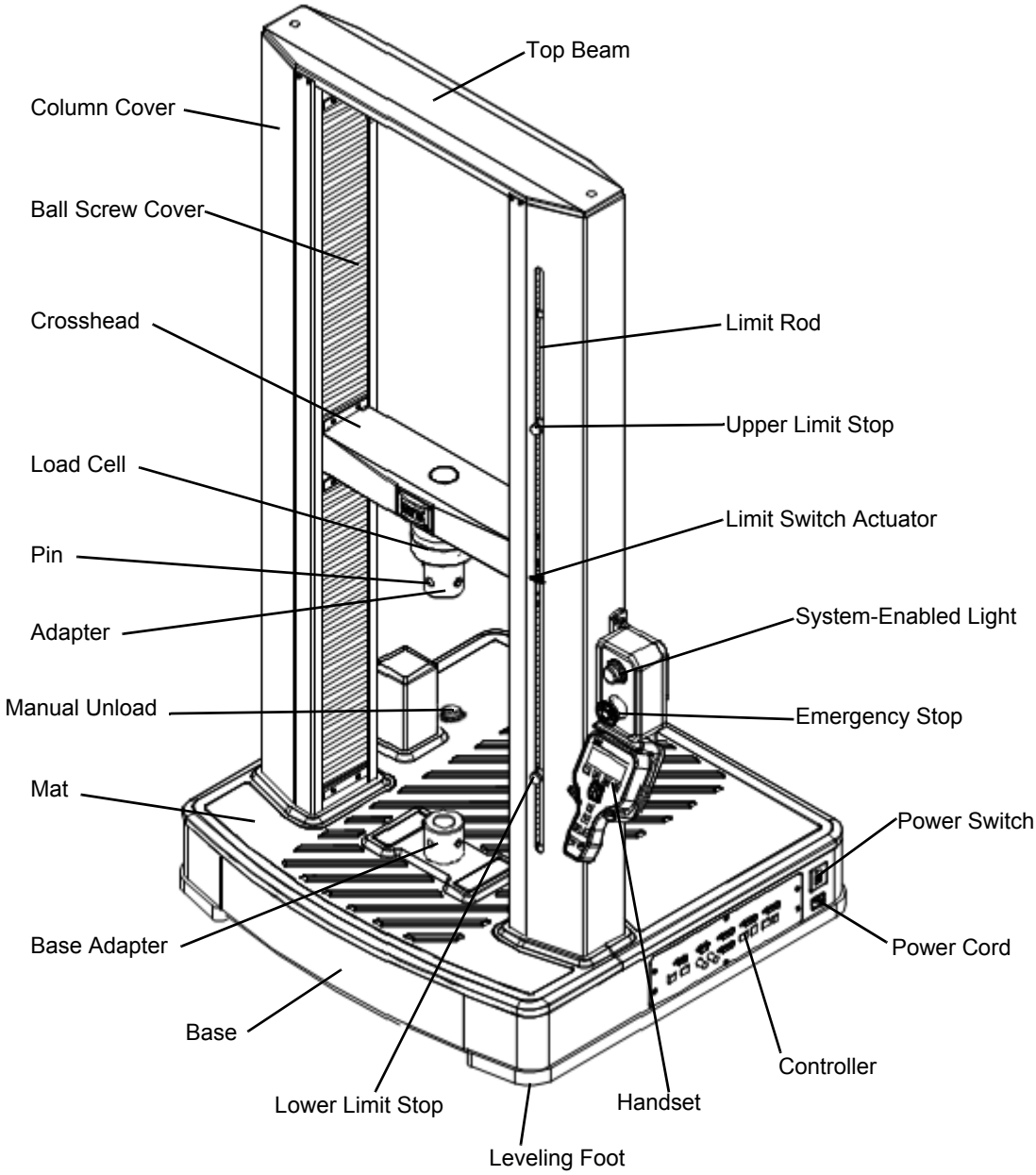

Model C43.104 - Rated Force Capacity 10 kN

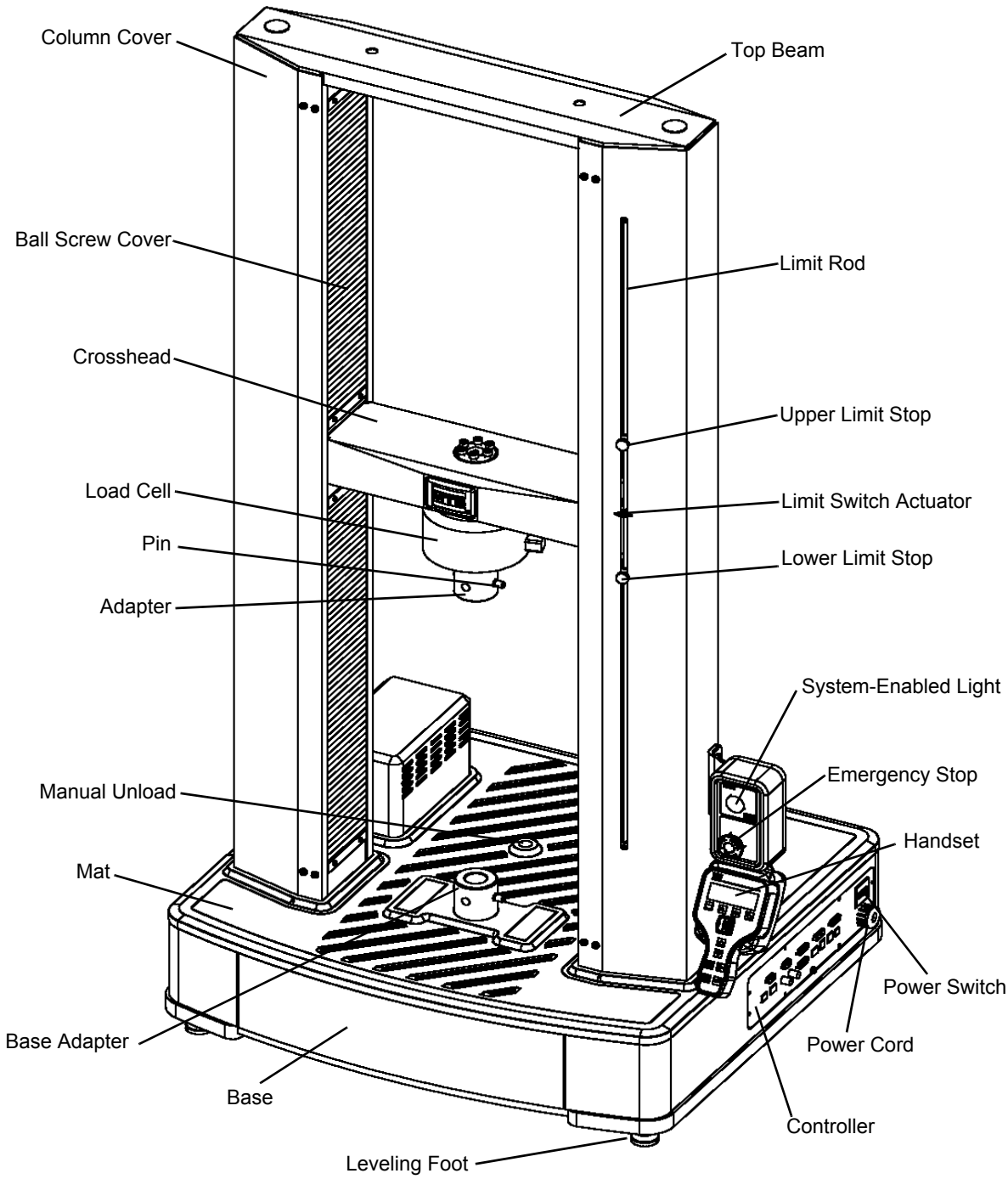

Model C43.304 and C43.504 - Rated Force Capacity 30 kN, 50 kN

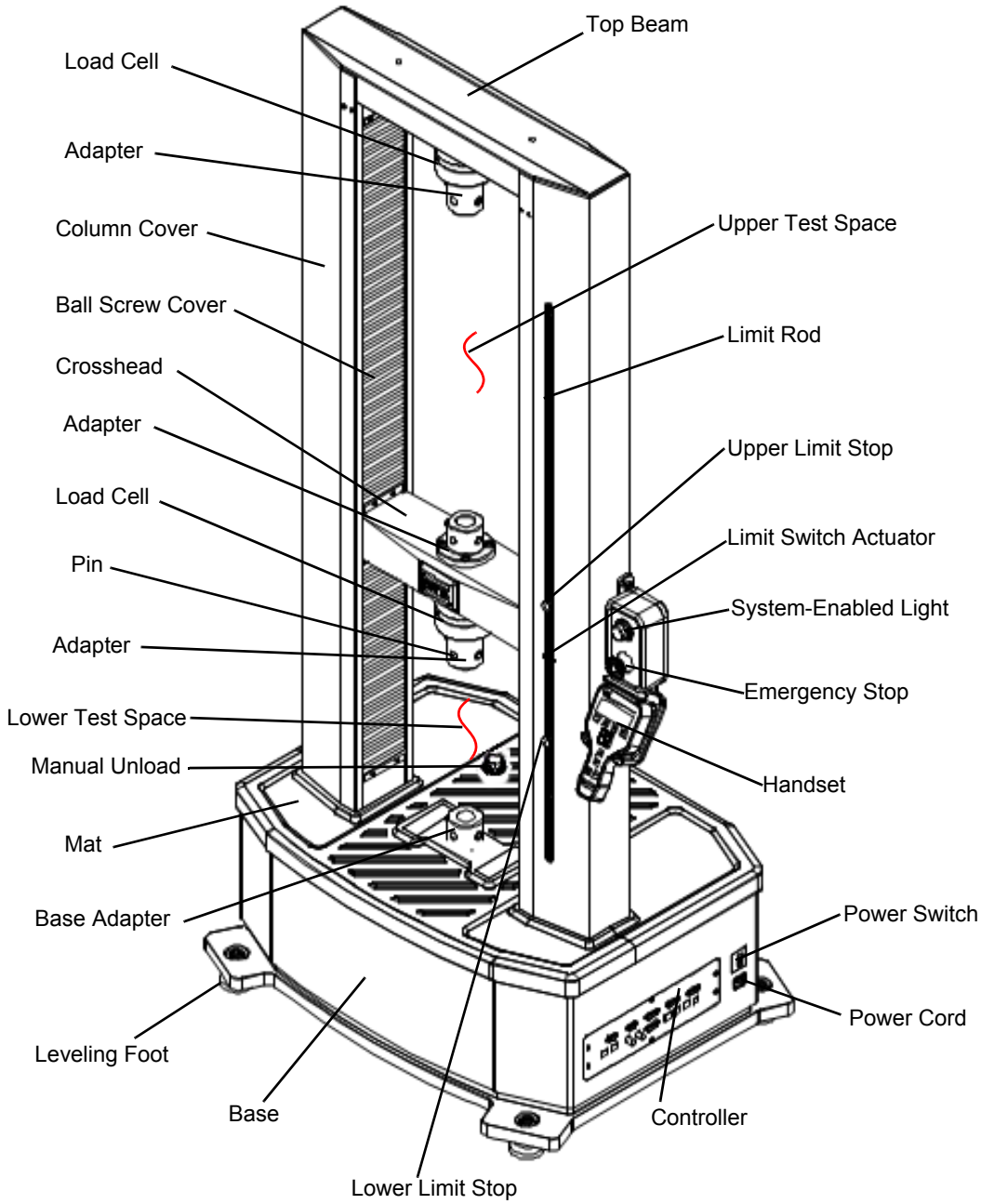

Model C44.104 and C44.304 - Rated Force Capacity 10 kN, 30 kN

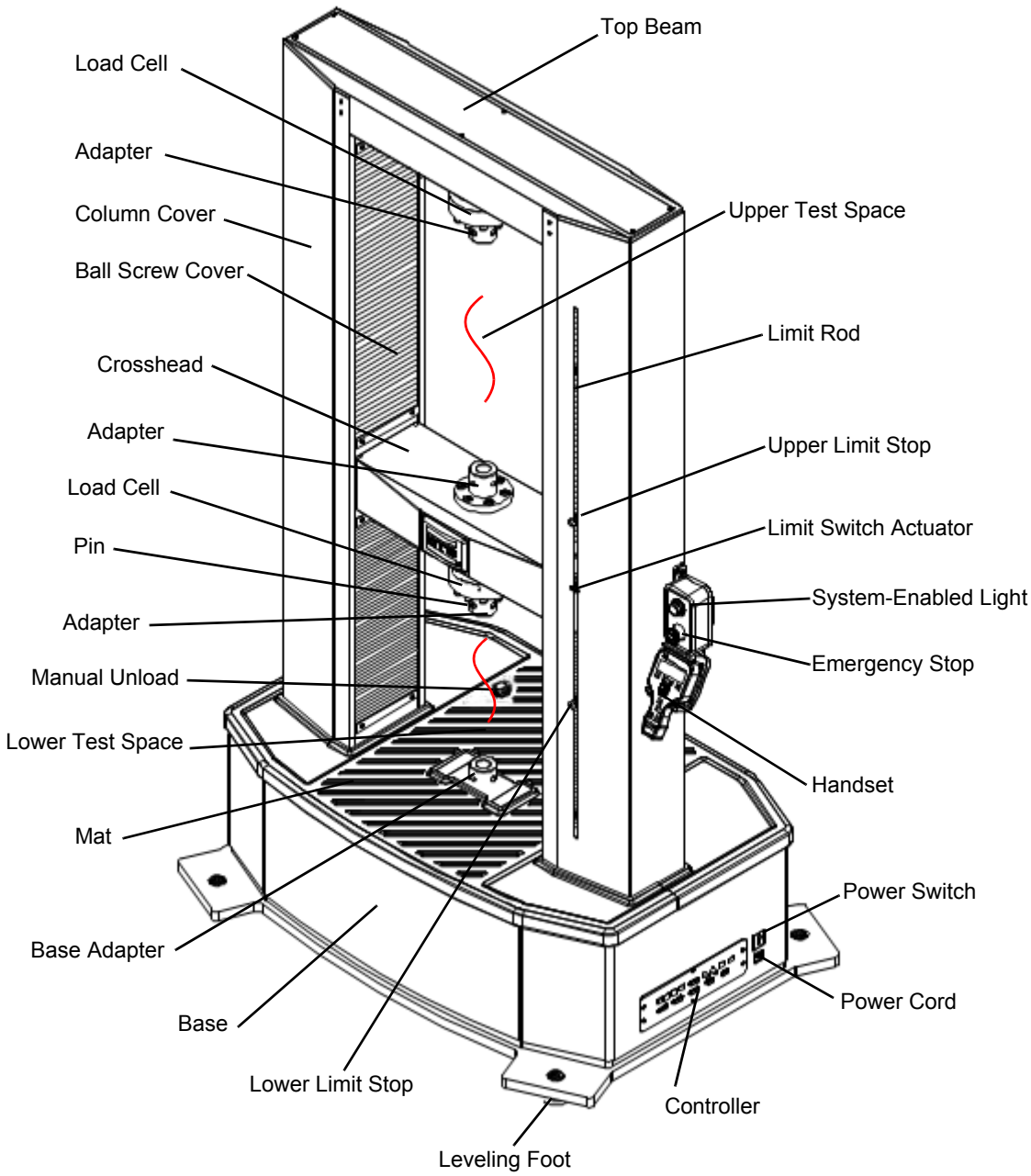

Model C45.504 and C45.105 - Rated Force Capacity 50 kN, 100 kN

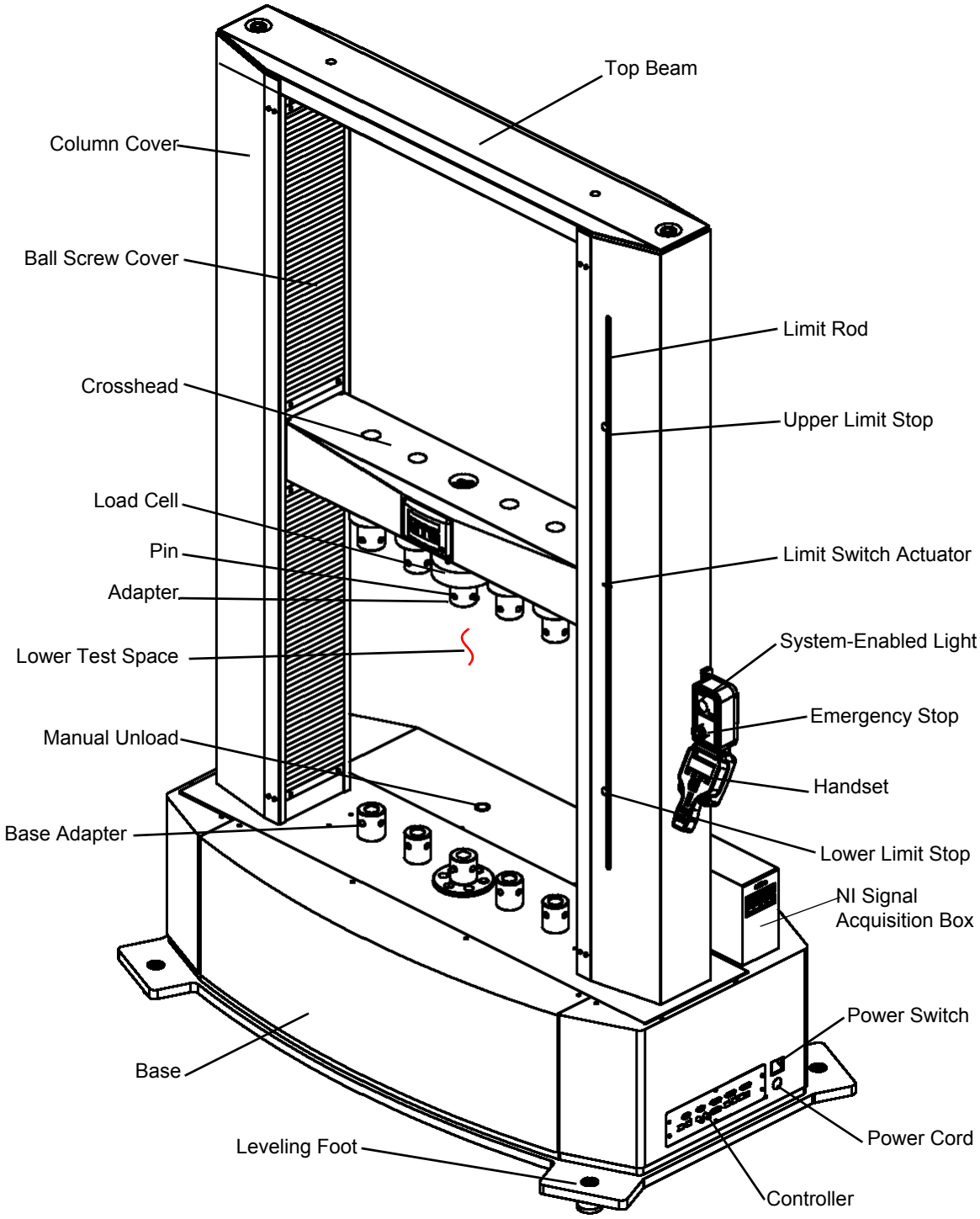

Model C45.504W - Rated Force Capacity 50 kN

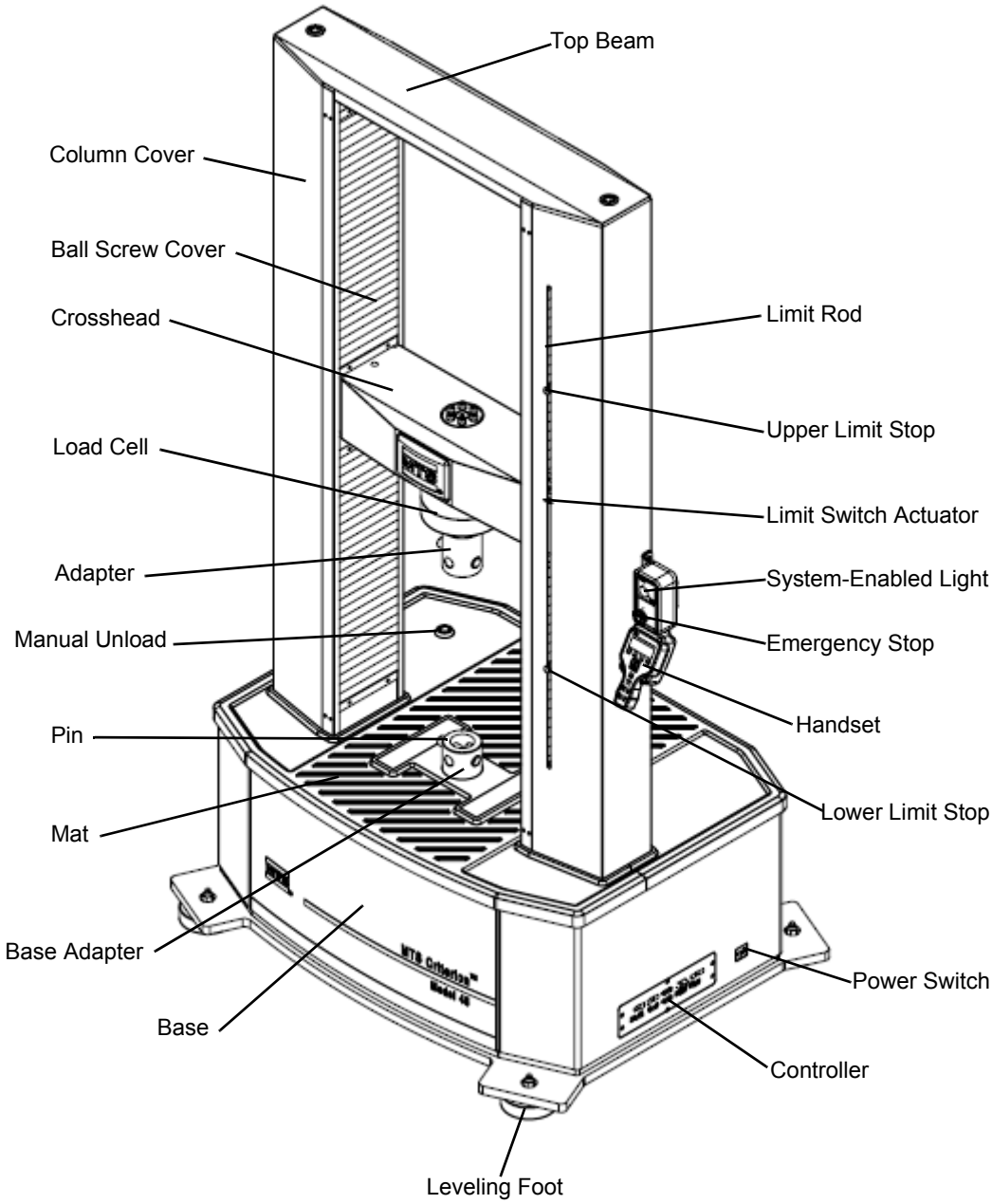

Model C45.305 (Front)- Rated Force Capacity 300 kN

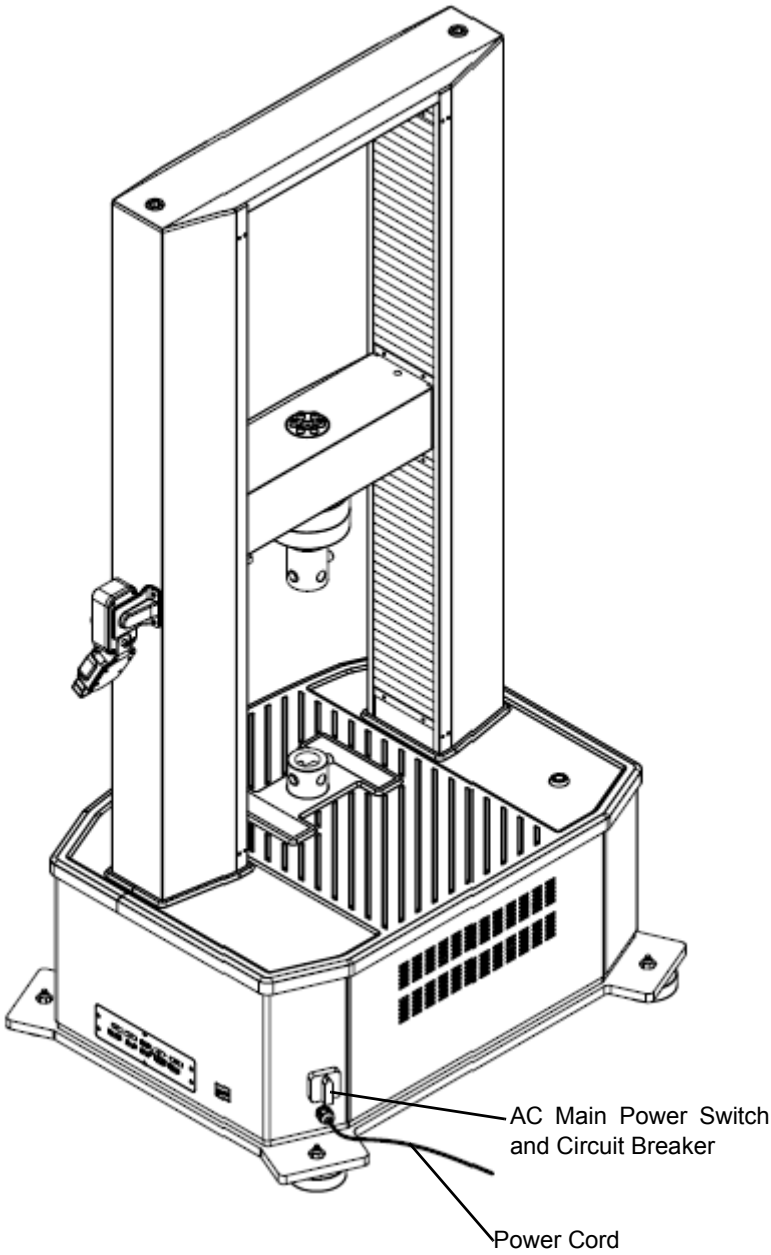

Model C45.305 (Back)- Rated Force Capacity 300 kN

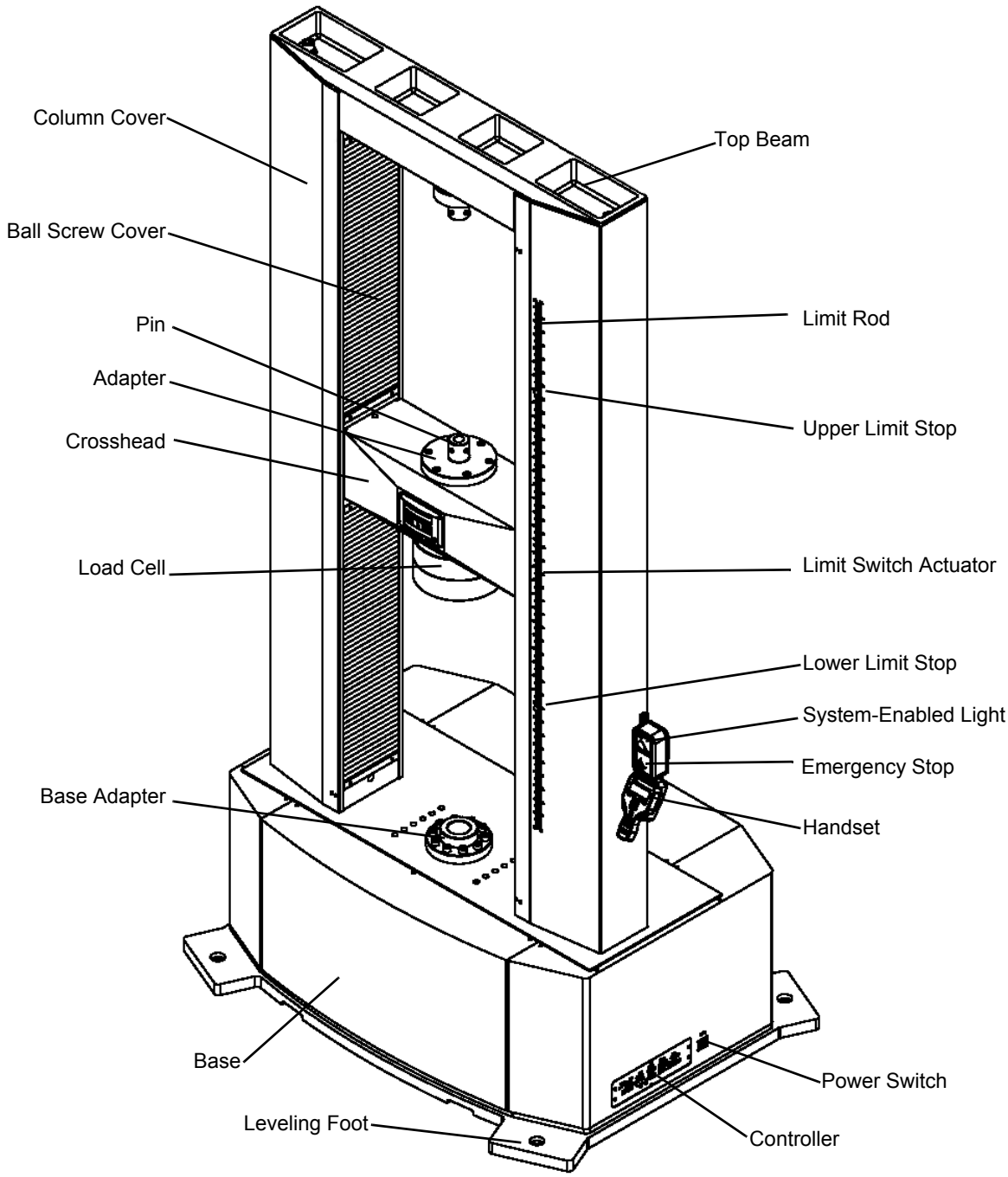

Model C45.605 (Front)- Rated Force Capacity 600 kN

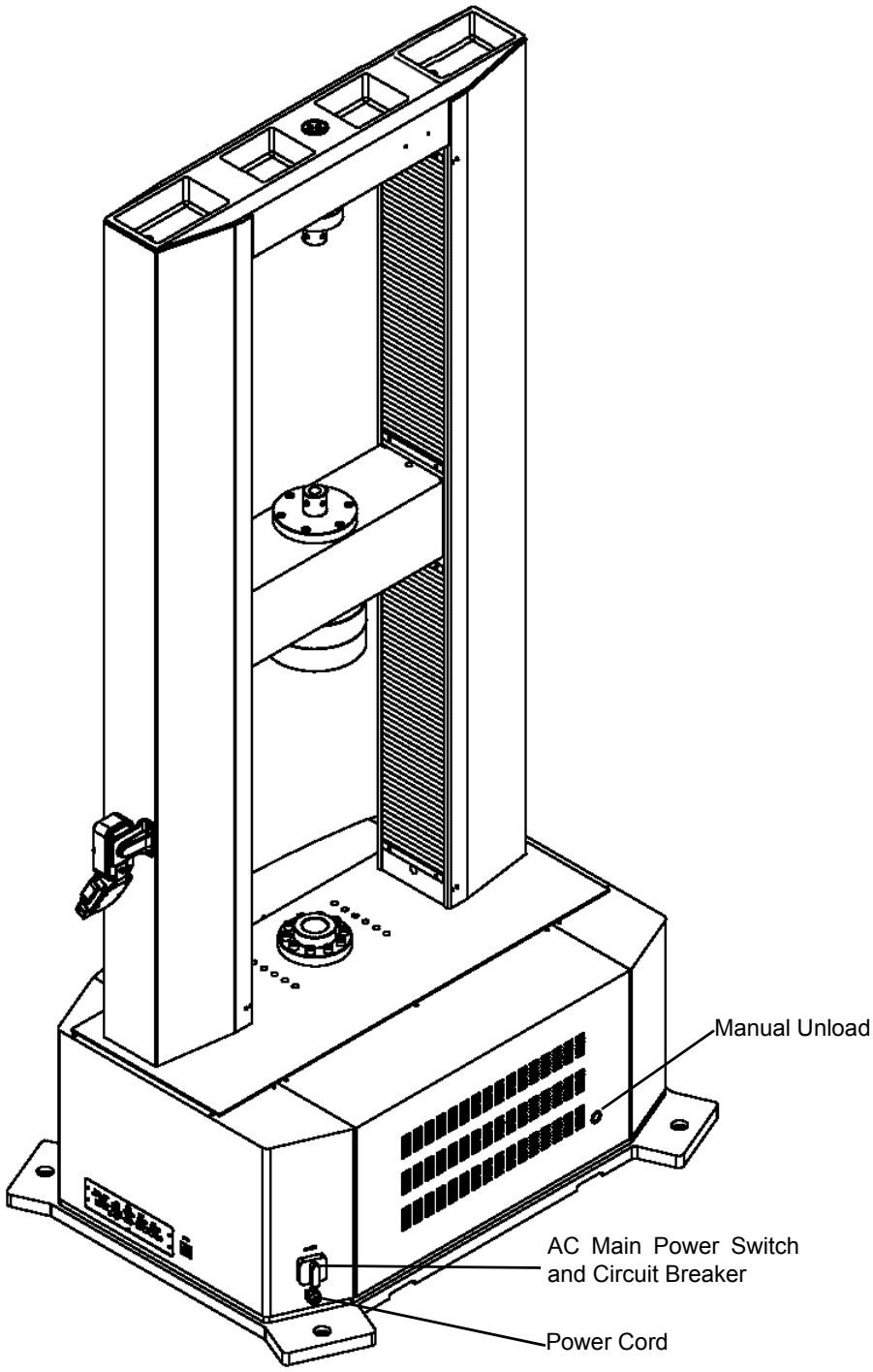

Model C45.605 (Back)- Rated Force Capacity 600 kN

Specifications

This section provides specifications for MTS Criterion Electromechanical Material Testing System frames and accessory mounting dimensions.

Note *Specifications are subject to change without notice. Contact MTS for verification of critical specifications.*

Common Specifications

The following specifications are for all MTS Criterion frames. Specifications for the specific models are located in the following tables.

CALIBRATION STANDARD	ISO 7500 CLASS 0.5 OR ASTM E4	ISO 7500 CLASS 1
Force range	1-100% of rated force capacity	0.5-1% of force rated capacity
Rated force capacity at max test speed	100%	
Maximum test speed at rated force capacity	100%	
Force indicating accuracy	± 0.5 % of indicating	
Speed accuracy	Set speed < 0.01 mm/min: speed accuracy is within ± 1.0% of set speed Set speed ≥ 0.01 mm/min: speed accuracy is within ± 0.2% of set speed	
Position accuracy	Within ± 0.5%	
Strain accuracy	ASTM E83 or ISO 8513	
Security protection	Over-Force, travel limits, over-voltage and others	
Over force protection	10%	
Data acquisition rate	1000 Hz	
Control loop rate	1000 Hz	
Environmental requirements	For indoor use only	
Operating temperature	5-40°C (41-104°F)	
Operating humidity	5-85% Noncondensing	
Storage temperature	-18-49°C (0-120°F)	
Maximum storage humidity	90% Noncondensing	
Maximum altitude	2000 m (6562 ft)	
Motor and drive system	AC Servomotor	
Ball screws	Preloaded	
Position measurement	Encoder	
Additional DC conditioning channels	2 channels	
Additional incremental encoder conditioning channels	1 channel	

Model Specifications

Specifications of Model C41

PARAMETER	SPECIFICATION
MODEL	**C41.103**
Maximum rated force capacity	1 kN (220 lbf)
Force capacity options	1 N, 5 N, 10 N, 25 N, 50 N, 100 N, 250 N, 500 N, 1 kN (0.2 lbf, 1 lbf, 2 lbf, 5 lbf, 10 lbf, 20 lbf, 50 lbf, 110 lbf, 220 lbf)
Frame type	1 Guide column, table-top
Test zone	Single
Maximum test speed	3000 mm/min (118 in/min)
Minimum test speed	0.005 mm/min (0.0002 in/min)
Position resolution	0.000051 mm (0.000002 in)
Vertical test space	
Standard length	1100 mm (43.31 in)
Crosshead travel	
Standard length	900 mm (35.4 in)
Clearance from loading axis to column cover	100 mm (3.94 in)
Frame height	
Standard length	1520 mm (59.84 in)
Frame width	560 mm (22.05 in)
Frame depth	530 mm (20.87 in)
Weight	
Standard length with enclosure	80 kg (176 lb)
Standard length without enclosure	60 kg (132 lb)
Power requirements	200-230 V AC 5 Amp. 50/60 Hz 1000 W 1 Phase

Specifications of Model C42

PARAMETER	SPECIFICATION
MODEL	C42.503
Maximum rated force capacity	5 kN (1100 lbf)
Force capacity options	1 N, 5 N, 10 N, 25 N, 50 N, 100 N, 250 N, 500 N 1 kN, 2 kN, 5 kN (0.2 lbf, 1 lbf, 2 lbf, 5 lbf, 10 lbf, 20 lbf, 50 lbf, 110 lbf 220 lbf, 450 lbf, 1100 lbf)
Frame type	1 Guide column, table-top
Test zone	Single
Maximum test speed	2000 mm/min (78.7 in/min)
Minimum test speed	0.005 mm/min (0.0002 in/min)
Position resolution	0.00005 mm (0.000002 in)
Vertical test space	
Standard length	820 mm (32.3 in)
Extended length	1120 mm (44.1 in)
Crosshead travel	
Standard length	650 mm (25.6 in)
Extended length	950 mm (37.4 in)
Clearance from loading axis to column cover	100 mm (3.94 in)
Frame height	
Standard length	1332 mm (52.44 in)
Extended length	1632 mm (64.25 in)
Frame width	704 mm (27.7 in)
Frame depth	636 mm (25 in)
Weight	
Standard length with enclosure	142 kg (312 lb)
Standard length without enclosure	112 kg (246 lb)
Extended length with enclosure	161 kg (354.2 lb)
Extended length without enclosure	125 kg (275 lb)
Power requirements	200-230 V AC 5 Amp 50/60 Hz 1000 W 1 Phase

Specifications of Model C43 (part 1 of 2)

PARAMETER	SPECIFICATION		
MODEL	C43.104	C43.304	C43.504
Maximum rated force capacity	10 kN	30 kN	50 kN
Force capacity options	100 N, 250 N, 500 N,1 kN, 2.5 kN, 5 kN, 10 kN	100 N, 250 N, 500 N,1 kN, 2.5 kN, 5 kN, 10 kN, 20 kN, 30 kN	100 N, 250 N, 500 N,1 kN, 2.5 kN, 5 kN, 10 kN, 20 kN, 30 kN, 50 kN
	(20 lbf, 50 lbf, 110 lbf, 220 lbf, 500 lbf, 1100 lbf, 2200 lbf)	(20 lbf, 50 lbf, 110 lbf, 220 lbf, 500 lbf, 1100 lbf, 2200 lbf, 4400 lbf, 6600 lbf)	(20 lbf, 50 lbf, 110 lbf, 220 lbf, 500 lbf, 1100 lbf, 2200 lbf, 4400 lbf, 6600 lbf, 11000lbf)
Frame type	2 Guide columns Table-top	2 Guide columns Table-top	2 Guide columns Table-top
Test zone	Single	Single	Single
Maximum test speed	2000 mm/min (78.7 in/min)	1020 mm/min (40.16 in/min)	750 mm/min (29.53 in/min)
Minimum test speed	0.005 mm/min (0.0002 in/min)	0.005 mm/min (0.0002 in/min)	0.005 mm/min (0.0002 in/min)
Position resolution	0.00005 mm (0.000002 in)	0.00006 mm (0.0000024 in)	0.00006 mm (0.0000024 in)
Vertical test space			
Standard length	1200 mm (47.2 in)	1200 mm (47.2 in)	1200 mm (47.2 in)
Extended length	1500 mm (59.1 in)	1500 mm (59.1 in)	1500 mm (59.1 in)
Crosshead travel			
Standard length	1000 mm (39.37 in)	1000 mm (39.37 in)	1000 mm (39.37 in)
Extended length	1300 mm (51.18 in)	1300 mm (51.18 in)	1300 mm (51.18 in)
Space between columns	425 mm (16.73 in)	420 mm (16.54 in)	420 mm (16.54 in)
Frame height			
Standard length	1616 mm (63.6 in)	1752 mm (68.97 in)	1752 mm (68.97 in)
Extended length	1916 mm (75.43 in)	2052 mm (80.28 in)	2052 mm (80.28 in)
Frame width	794 mm (31.26 in)	826 mm (32.52 in)	826 mm (32.52 in)
Frame depth	757 mm (29.8 in)	768 mm (30.24 in)	768 mm (30.24 in)

Specifications of Model C43 (part 2 of 2)

Weight			
Standard length with enclosure	212 kg (466.4 lb)	350 kg (770 lb)	350 kg (770 lb)
Standard length without enclosure	175 kg (385 lb)	305 kg (671 lb)	305 kg (671 lb)
Extended length with enclosure	232 kg (510.4 lb)	378 kg (831.6 lb)	378 kg (831.6 lb)
Extended length without enclosure	190 kg (418 lb)	325 kg (715 lb)	325 kg (715 lb)
Power requirements	200-230 V AC 10 Amp 50/60 Hz 2000 W 1 Phase	200-230 V AC 12 Amp 50/60 Hz 2400 W 1 Phase	200-230 V AC 12 Amp 50/60 Hz 2400 W 1 Phase

Specifications of Model C44

PARAMETER	SPECIFICATION	
MODEL	C44.104	C44.304
Maximum rated force capacity	10 kN	30 kN
Force capacity options	100 N, 250 N, 500 N,1 kN, 2.5 kN, 5 kN, 10 kN (20 lbf, 50 lbf, 110 lbf, 220 lbf, 500 lbf, 1100 lbf, 2200 lbf)	100 N, 250 N, 500 N,1 kN, 2.5 kN, 5 kN, 10 kN, 20 kN,30 kN (20 lbf, 50 lbf, 110 lbf, 220 lbf, 500 lbf, 1100 lbf, 2200 lbf, 4400 lbf, 6600 lbf)
Frame type	2 Guide columns Floor-standing	2 Guide columns Floor-standing
Test zone	Single or Dual	Single or Dual
Maximum test speed	2000 mm/min (78.7 in/min)	1020 mm/min (40.16 in/min)
Minimum test speed	0.005 mm/min (0.0002 in/min)	0.005 mm/min (0.0002 in/min)
Position resolution	0.000049 mm (0.0000019 in)	0.00006 mm (0.0000024 in)
Vertical test space		
Standard length	1190 mm (46.9 in)	1190 mm (46.9 in)
Extended length	1490 mm (58.7 in)	1490 mm (58.7 in)
Crosshead travel		
Standard length	1000 mm (45.28 in)	1000 mm (45.28 in)
Extended length	1300 mm (51.18 in)	1300 mm (51.18 in)
Space between columns	400 mm (15.75 in)	400 mm (15.75 in)
Frame height		
Standard length	1951 mm (76.8 in)	1951 mm (76.8 in)
Extended length	2251 mm (88.6 in)	2251 mm (88.6 in)
Frame width	861 mm (33.9 in)	861 mm (33.9 in)
Frame depth	689 mm (27.1 in)	689 mm (27.1 in)
Weight		
Standard length with enclosure	403 kg (886.6 lb)	431 kg (948.2 lb)
Standard length without enclosure	367 kg (807.4 lb)	395 kg (869 lb)
Extended length with enclosure	425 kg (935 lb)	452 kg (994.4 lb)
Extended length without enclosure	383 kg (842.6 lb)	410 kg (902 lb)
Power requirements	200-230 V AC 10 Amp 50/60 Hz 2000 W 1 Phase	200-230 V AC 12 Amp 50/60 Hz 2400 W 1 Phase

Specifications of Model C45 (part 1 of 2)

PARAMETER	SPECIFICATION		
MODEL	C45.504	C45.504W	C45.105
Maximum rated force capacity	50 kN	50 kN	100 kN
Force capacity options	1 kN, 2.5 kN, 5 kN, 10 kN, 20 kN, 30 kN, 50 kN (220 lbf, 500 lbf, 1100 lbf, 2200 lbf, 4400 lbf, 6600 lbf, 11000 lbf)	1 kN, 2.5 kN, 5 kN, 10 kN, 20 kN, 30 kN, 50 kN (220 lbf, 500 lbf, 1100 lbf, 2200 lbf, 4400 lbf, 6600 lbf, 11000 lbf)	1 kN, 2.5 kN, 5 kN, 10 kN, 20 kN, 30 kN, 50 kN,100 kN (220 lbf, 500 lbf, 1100 lbf, 2200 lbf, 4400 lbf, 6600 lbf, 11000 lbf, 22000 lbf)
Frame type	2 Guide columns Floor-standing	2 Guide columns Floor-standing	2 Guide columns Floor-standing
Test zone	Single or Dual	Single	Single or Dual
Maximum test speed	750 mm/min (29.53 in/min)	750 mm/min (29.53 in/min)	750 mm/min (29.53 in/min)
Minimum test speed	0.005 mm/min (0.0002 in/min)	0.005 mm/min (0.0002 in/min)	0.005 mm/min (0.0002 in/min)
Position resolution	0.000047 mm (0.0000019 in)	0.000047 mm (0.0000019 in)	0.000047 mm (0.0000019 in)
Vertical test space			
Standard length	1220 mm (48.0 in)	1520 mm (59.8 in)	1220 mm (48.0 in)
Extended length	1520 mm (59.8 in)	———	1520 mm (59.8 in)
Crosshead travel			
Standard length	1000 mm (39.37 in)	1300 mm (51.18 in)	1000 mm (39.37 in)
Extended length	1300 mm (51.18 in)	———	1300 mm (51.18 in)
Space between columns	600 mm (23.62 in)	1000 mm (39.37 in)	600 mm (23.62 in)
Frame height			
Standard length	2269 mm (89.3 in)	2569 mm (101.1 in)	2269 mm (89.3 in)
Extended length	2569 mm (101.1 in)	———	2569 mm (101.1 in)
Frame width	1315 mm (51.77 in)	1710 mm (67.32 in)	1315 mm (51.77 in)
Frame depth	957 mm (37.68 in)	957 mm (37.68 in)	957 mm (37.68 in)

Specifications of Model C45 (part 2 of 2)

Weight			
Standard length with enclosure	1240 kg (2734 lb)	1800 kg (3968 lb)	1240 kg (2734 lb)
Standard length without enclosure	1195 kg (2635 lb)	1700 kg (3748 lb)	1195 kg (2635 lb)
Extended length with enclosure	1318 kg (2906 lb)	————	1318 kg (2906 lb)
Extended length without enclosure	1265 kg (2789 lb	————	1265 kg (2789 lb
Power requirements	200-230 V AC 12 Amp 50/60 Hz 2400 W 1 Phase	200-230 V AC 12 Amp 50/60 Hz 2400 W 1 Phase	200-230 V AC 22 Amp 50/60 Hz 4400 W 1 Phase

Specifications of Model C45

PARAMETER	SPECIFICATION	
MODEL	C45.305	C45.605
Maximum rated force capacity	300 kN	600 kN
Force capacity options	150 kN, 200 kN, 300 kN (33,000 lbf, 44,000 lbf, 66,000 lbf)	100 kN(Upper Zone), 500 kN, 600 kN (22,000 lbf, 110,000 lbf, 132,000 lbf)
Frame type	2 Guide columns Floor-standing	2 Guide columns Floor-standing
Test zone	Single	Dual
Maximum test speed	750 mm/min (29.53 in/min)	254 mm/min (10 in/min)
Minimum test speed	0.005 mm/min (0.0002 in/min)	0.005 mm/min (0.0002 in/min)
Position resolution	0.000049 mm (0.0000019 in)	0.000016 mm (0.0000006 in)
Vertical test space		
Standard length	1540 mm (60.63 in)	2000 mm (78.74 in)
Extended length	1840 mm (72.44 in)	———
Crosshead travel		
Standard length	1100 mm (43.31 in)	1750 mm (68.90 in)
Extended length	1400 mm (55.12 in)	———
Space between columns	650 mm (25.59 in)	750 mm (29.52 in)
Frame height		
Standard length	2535 mm (99.80 in)	3490 mm (137.40 in)
Extended length	2835 mm (111.61 in)	———
Frame width	1362 mm (53.62 in)	1660 mm (65.35 in)
Frame depth	1100 mm (43.31 in)	1272 mm (50.08 in)
Weight		
Standard length with enclosure	1660 kg (3660 lb)	3530 kg (7782 lb)
Standard length without enclosure	1605 kg (3538 lb)	3500 kg (7716 lb)
Extended length with enclosure	1760 kg (3880 lb)	———
Extended length without enclosure	1695 kg (3737 lb)	———
Power requirements	380-480 V AC 20 Amp 50/60 Hz 5200 W 3 Phase	380-480 V AC 20 Amp 50/60 Hz 5200 W 3 Phase

Dimensions

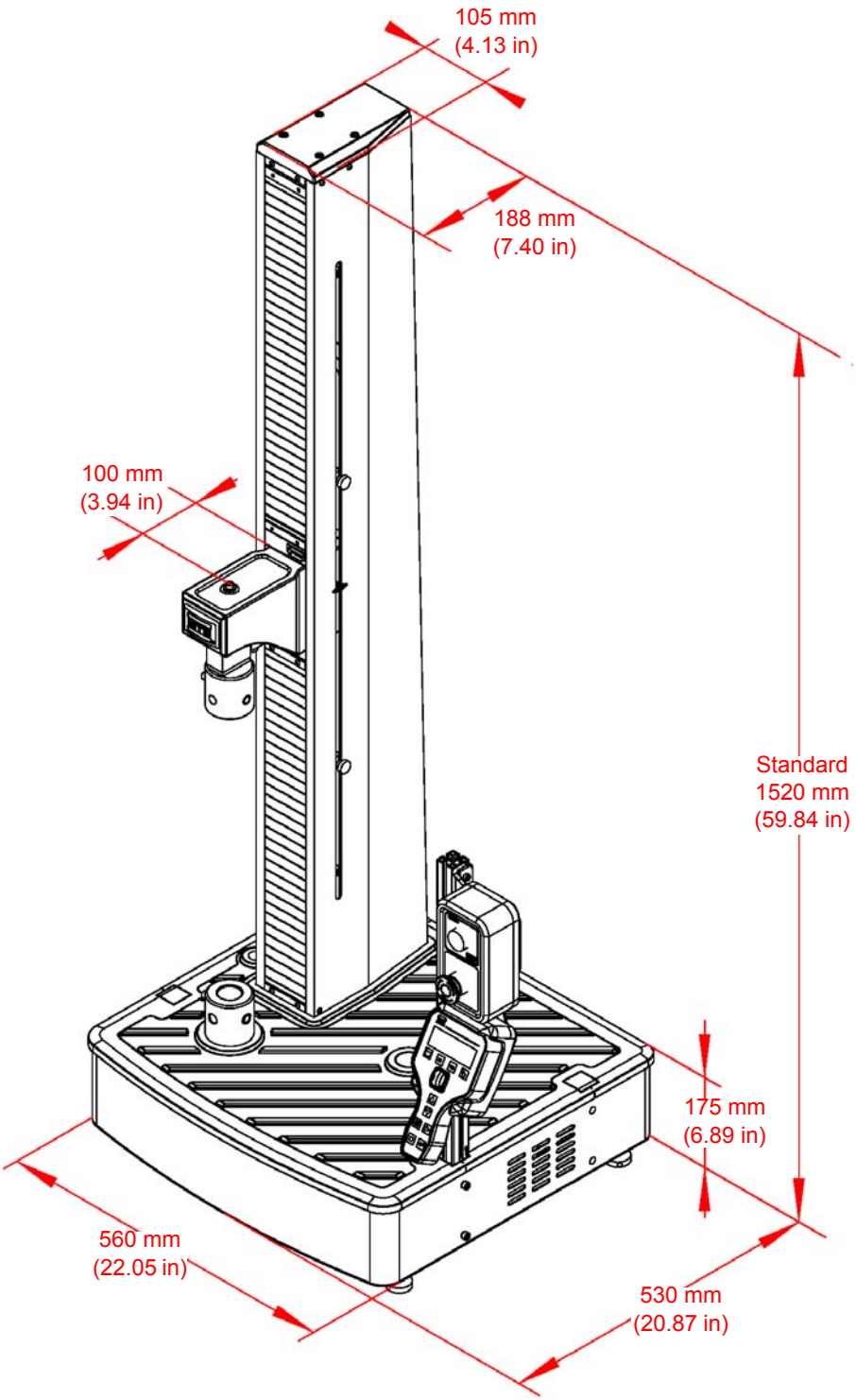

Model C41.103-Rated Force Capacity 5 kN

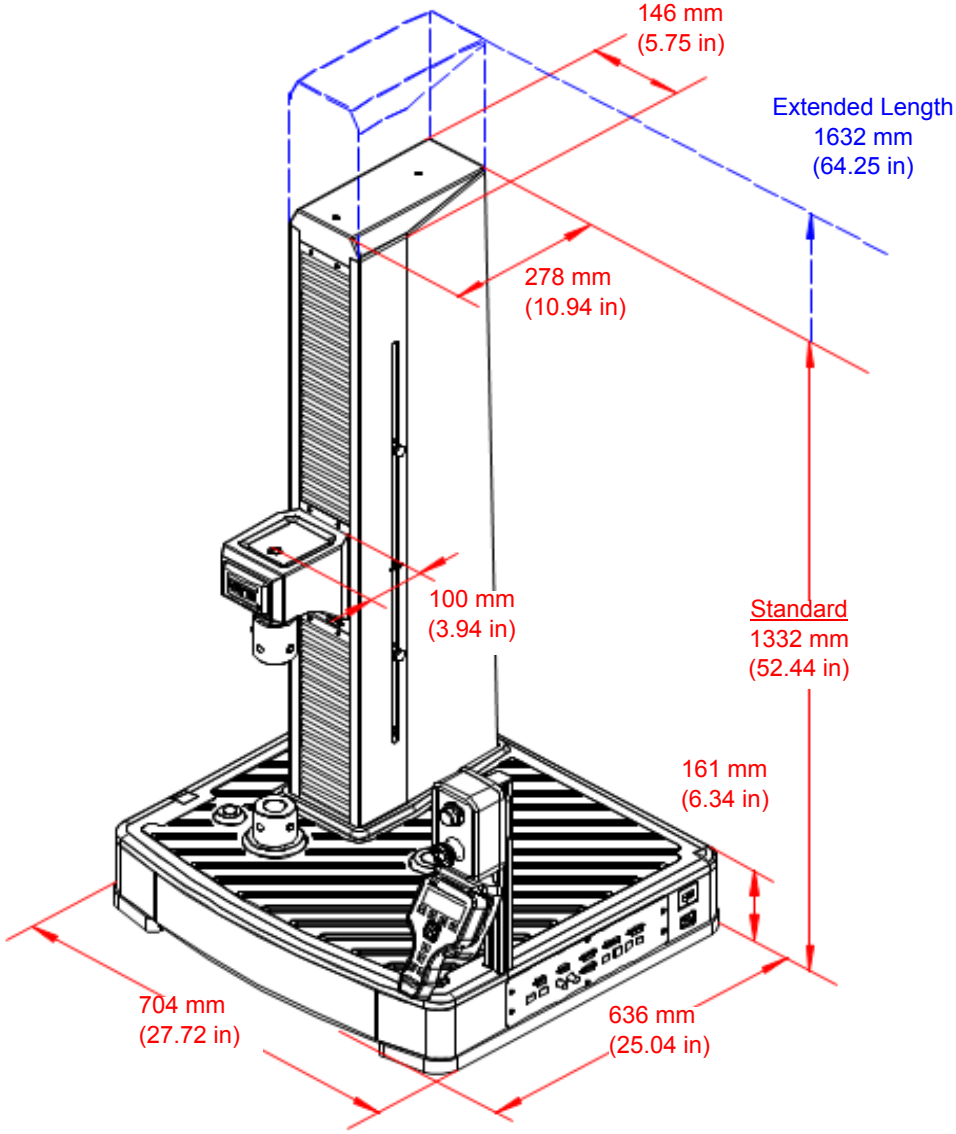

Model C42.503 - Rated Force Capacity 5 kN

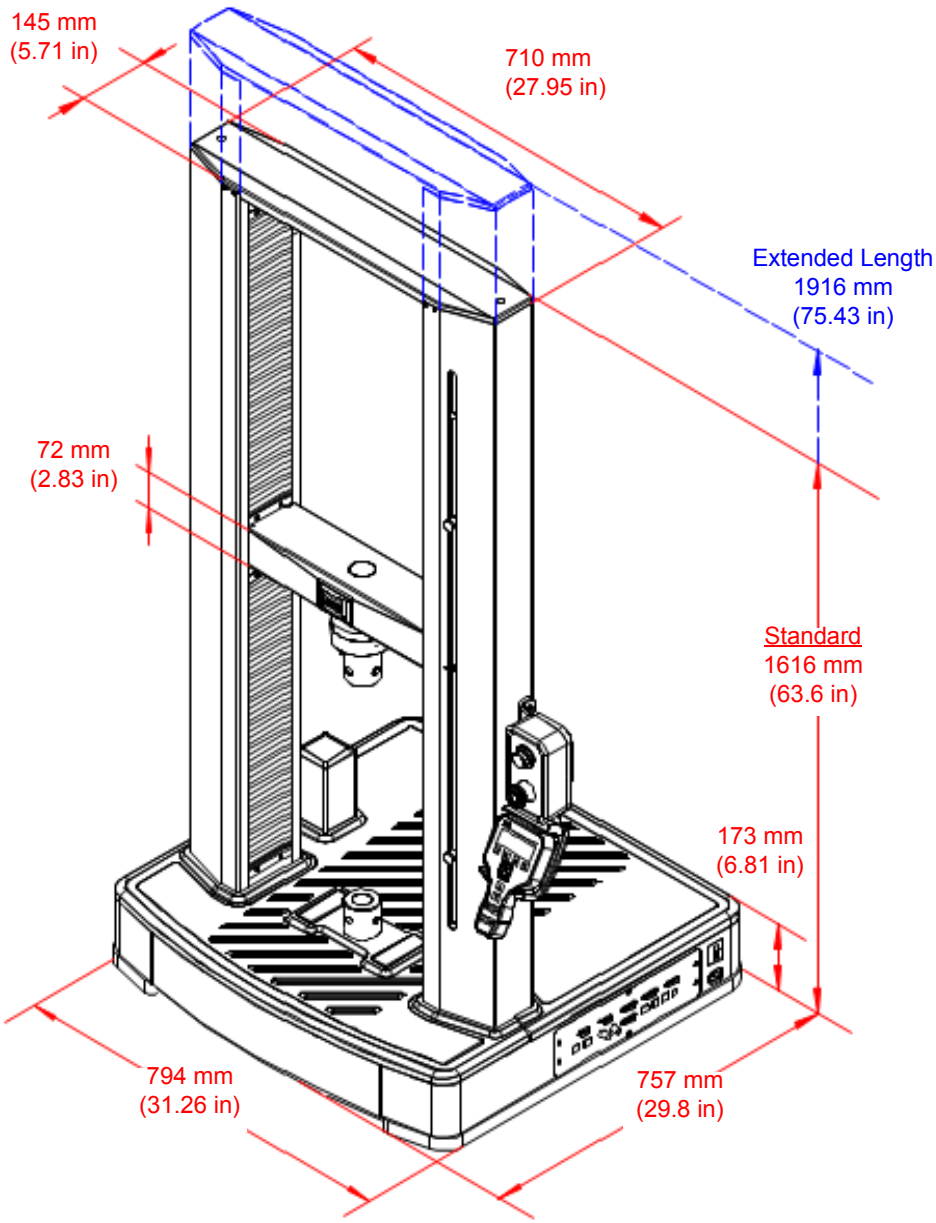

Model C43.104 - Rated Force Capacity 10 kN

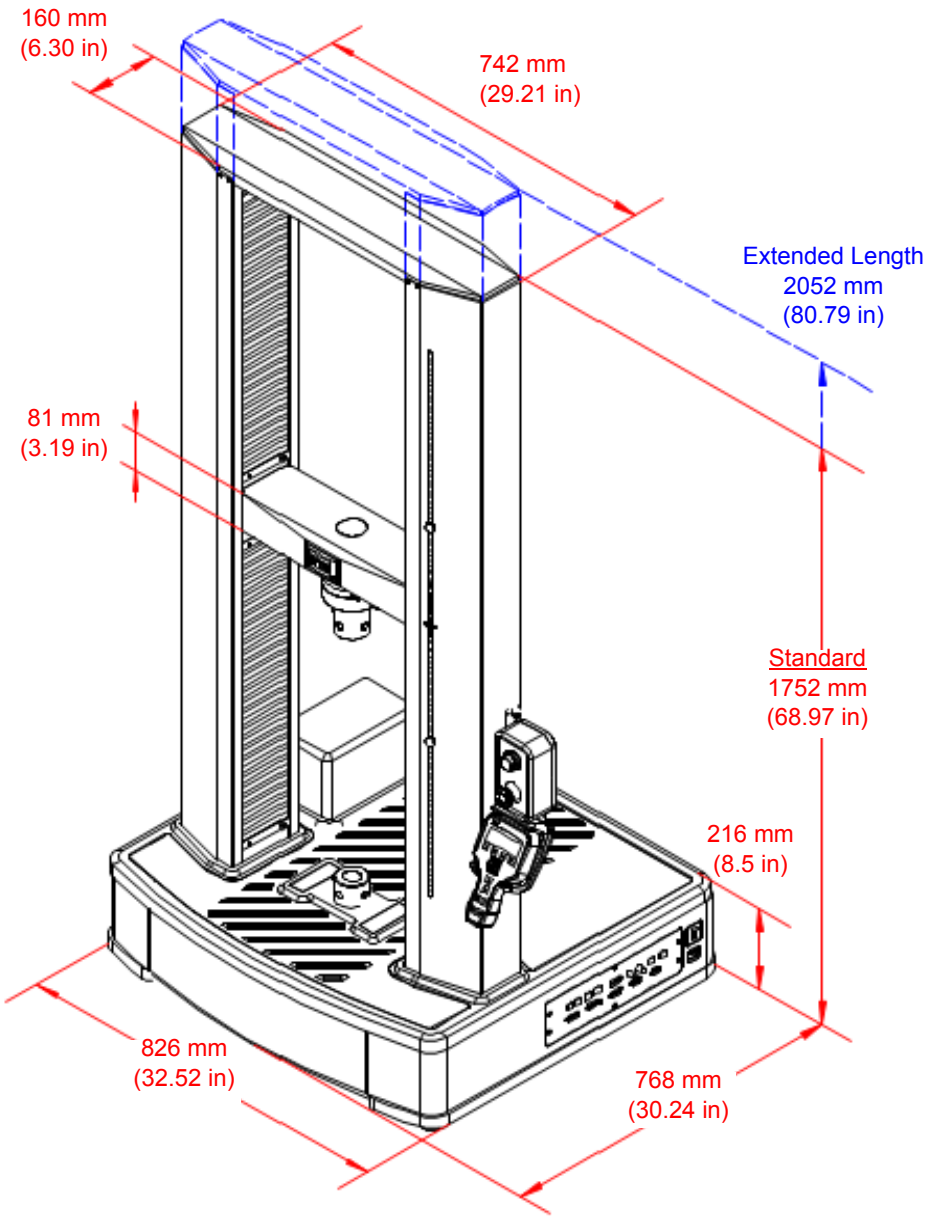

Model C43.304 and C43.504 - Rated Force Capacity 30 kN, 50 kN

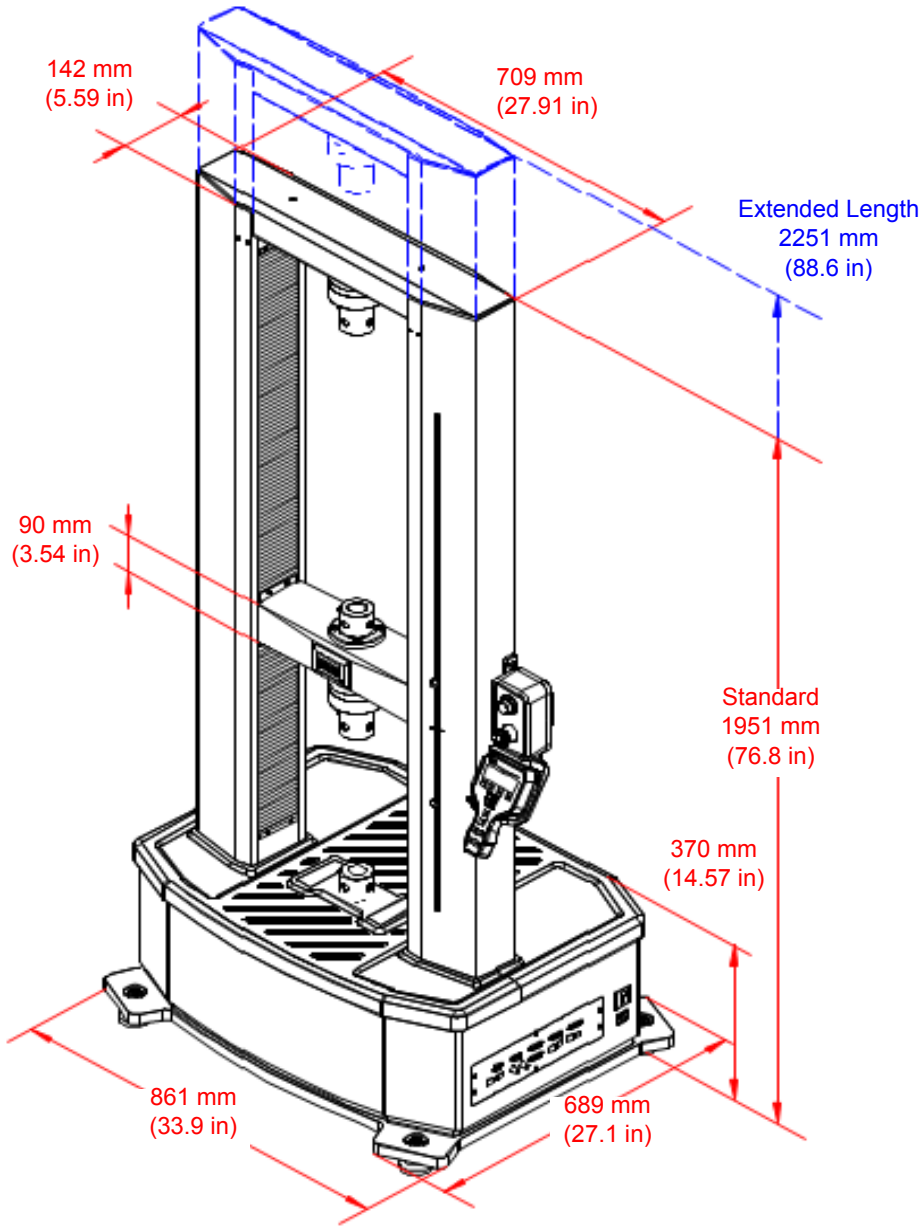

Model C44.104 and C44.304 - Rated Force Capacity 10 kN, 30 kN

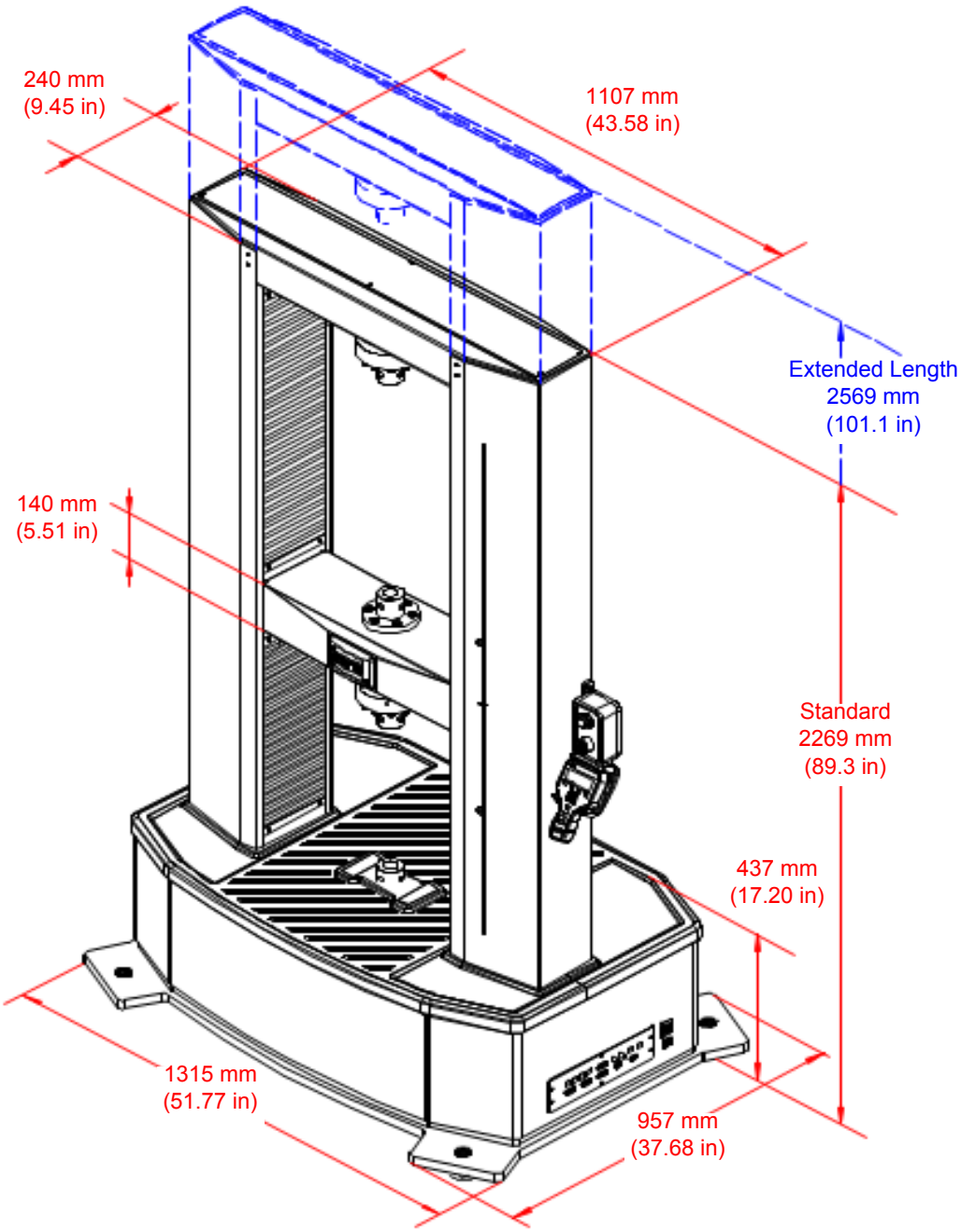

Model C45.504 and C45.105 - Rated Force Capacity 50 kN, 100 kN

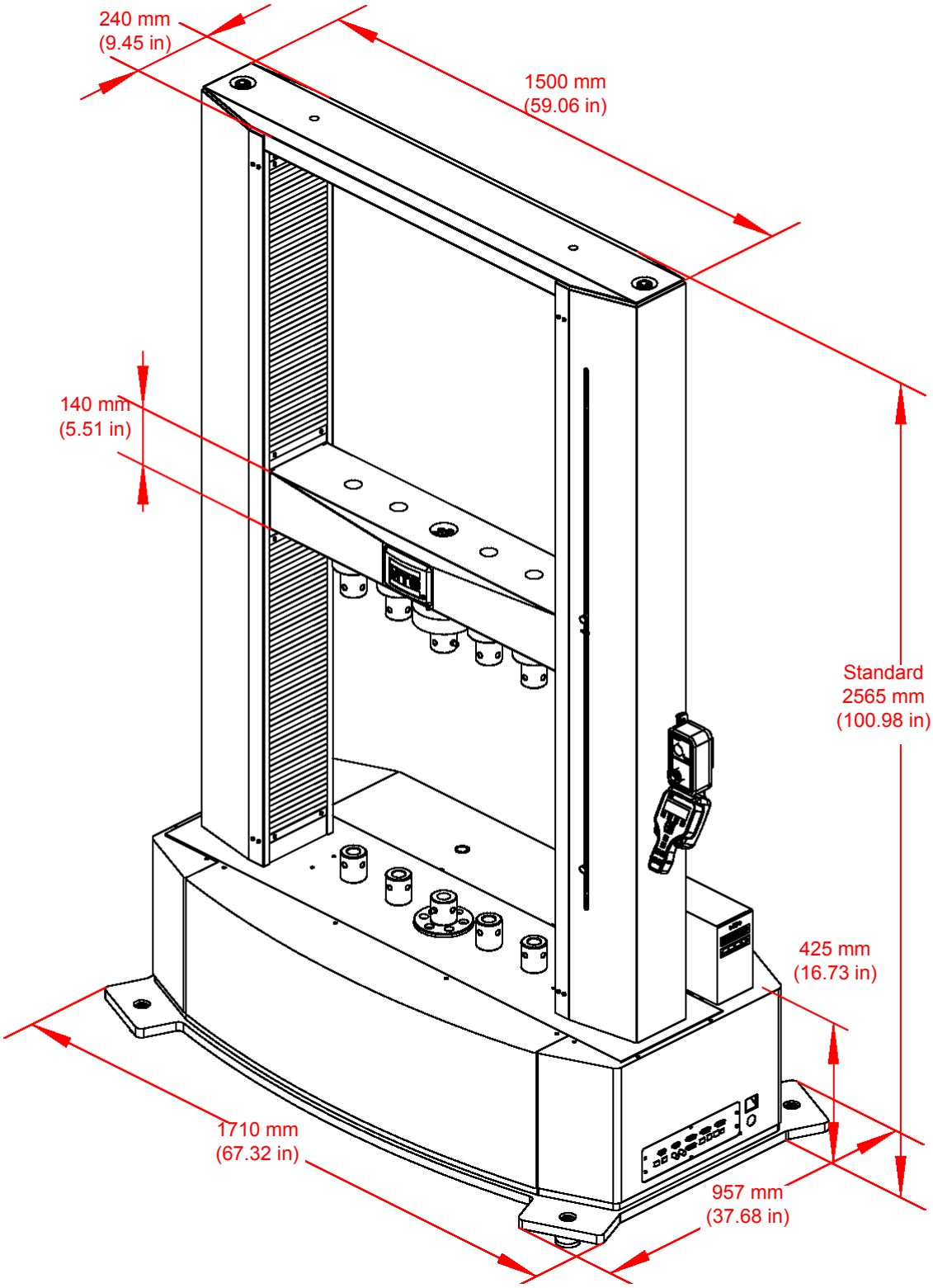

Model C45.504W - Rated Force Capacity 50 kN

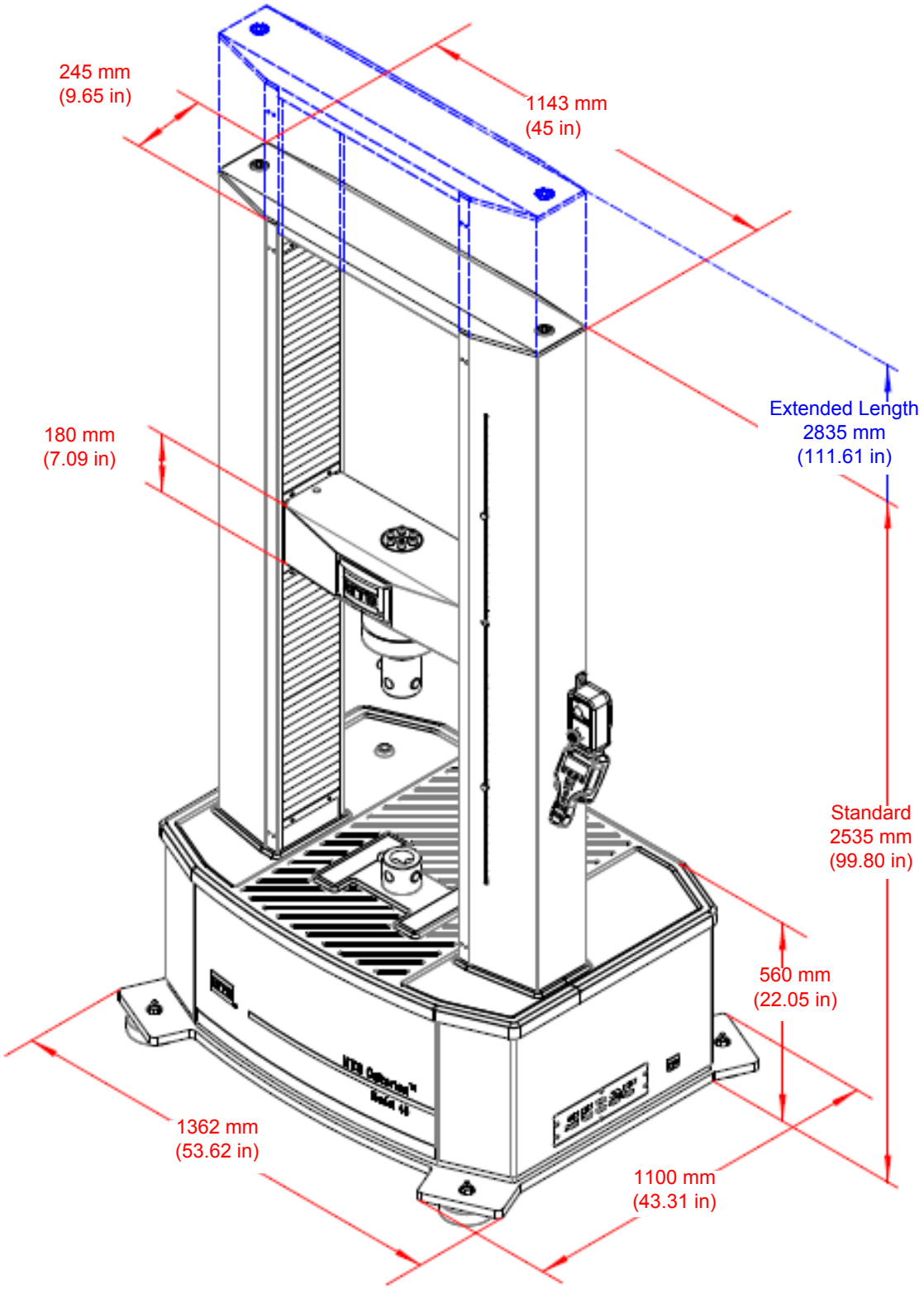

Model C45.305 - Rated Force Capacity 300 kN

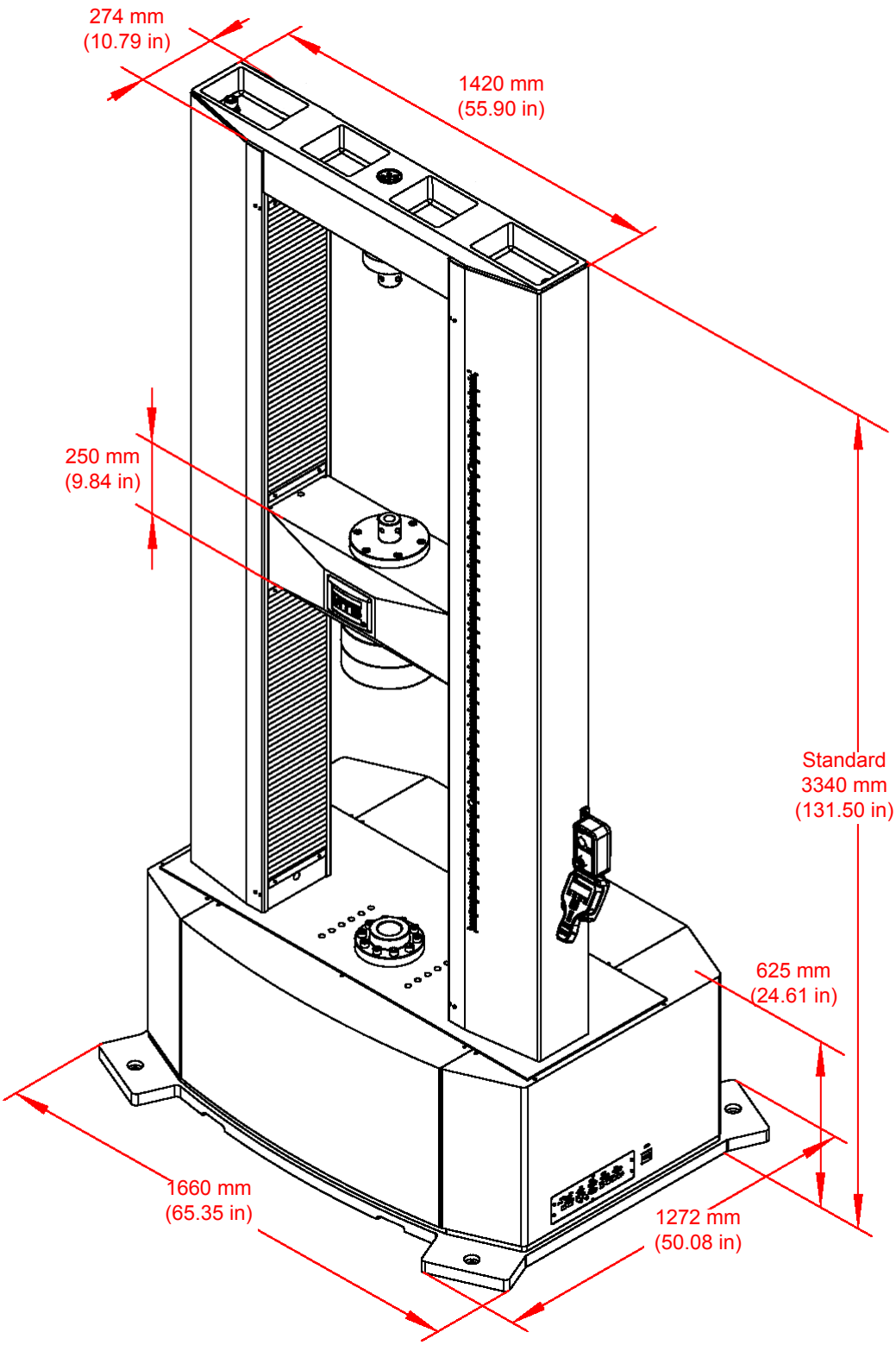

Model C45.605 - Rated Force Capacity 600 kN

Installation

Contents

Frame Location and Ventilation

To ensure proper ventilation, locate the load frame approximately 300 mm (12 inches) from adjacent walls and equipment. Allow approximately 1 m (3 feet) behind the equipment for service access. Do not block the vent holes on the sides or bottom of the frame.

For comfortable working conditions and proper equipment operation, heat dissipation of the equipment must be considered in providing adequate heating or air conditioning in the laboratory area. Heat dissipation can be approximated by summing the heat losses going into a room (1 kVA is equivalent to 860 kcal/hr [3,400 Btu/hr]) and the gains from other sources such as furnaces and personnel.

Leveling the Load Frame

Leveling the Table-Top Load Frame

Level the table-top load frame immediately after you position it for installation. This prevents the base from rocking and provides a level test surface for more accurate test results.

Equipment

The following items are required:

- Spirit or bubble level
- Open-end wrench

Procedure

To level the frame base:

1. Place a spirit or bubble level on the center of the base beam.
2. Loosen the top nut on each leveling foot.
3. Using an open-end wrench, alternately adjust the height of each leveling foot while you monitor the spirit or bubble level reading.
4. Rotate the spirit or bubble level 90° to verify that the load frame is level side to side and front to back.
5. When the machine is level, tighten the top nut on each leveling foot.

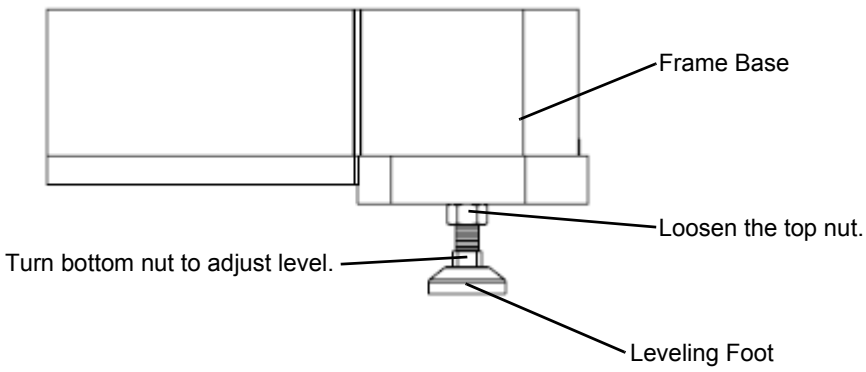

Leveling the Floor-Standing Load Frame

Level the load frame immediately after you position it for installation. This prevents the base from rocking and provides a level test surface for more accurate test results.

Equipment

The following items are required:

- Spirit or bubble level
- 8# hex key wrench for C44 model
- 10# hex key wrench for C45.105 and C45.504W model
- 24# open-end wrench for C45.305 model
- 28# open-end wrench for C45.605 model

Procedure

To level the frame base:

1. Place a spirit or bubble level on the center of the base beam.
2. Loosen the top nut on each leveling foot using the open-end wrench.
3. Using hex key wrench or open-end wrench, alternately adjust the height of each leveling foot while you monitor the spirit or bubble level reading.
4. Rotate the spirit or bubble level 90° to verify that the load frame is level side to side and front to back.
5. When the machine is level, tighten the top nut on each leveling foot using the socket wrench.

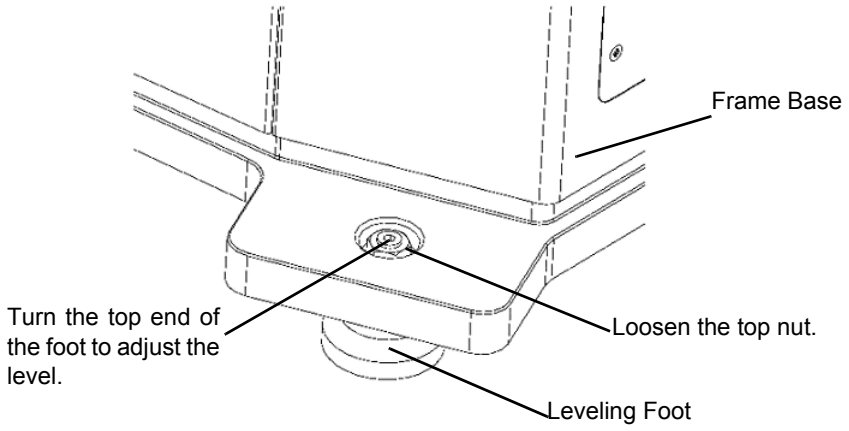

Installing Optional Enclosures

Every MTS Criterion Series 40 Material Test System has an optional test area enclosure. If the MTS test enclosure is not purchased, customers must provide an enclosure of their own to protect against ejected parts or materials from test specimens.

Single-Column Load Frame

The optional enclosure for single-column load frames is comprised of a back frame and a front door, which completely encloses the test space.

When shipping, front door and back frame of enclosure are removed from the frame and packaged separately. After the frame is placed in its testing location, you need to install enclosure.

C41 model

A typical installation procedure for installing an enclosure for C41 single-column units is provided following the figure.

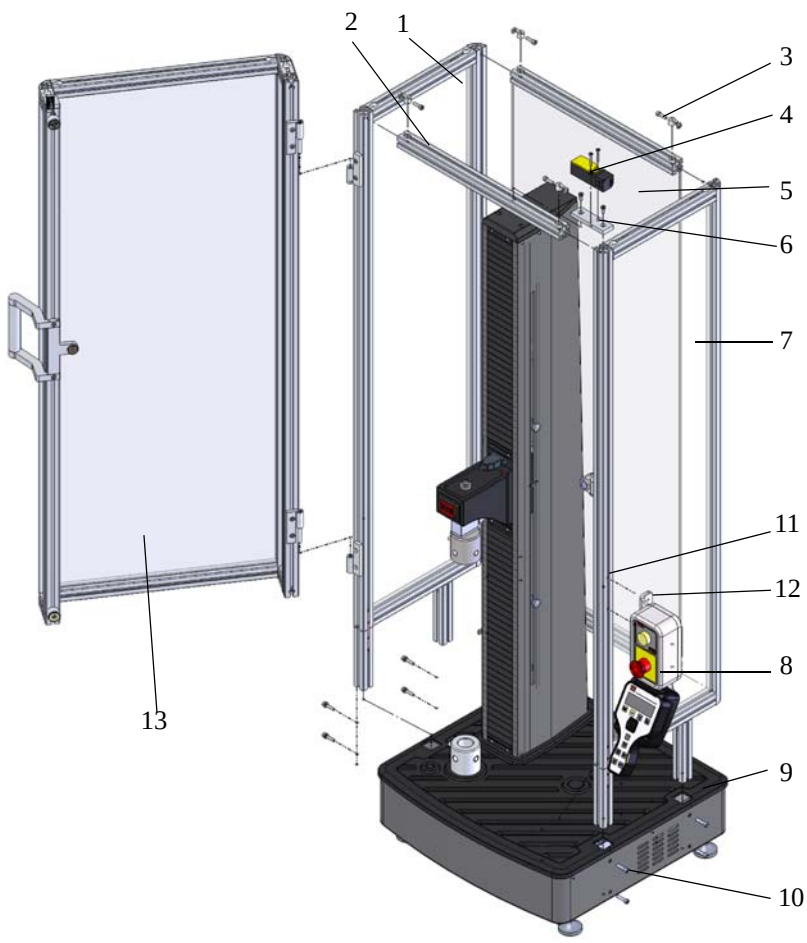

Item	Description
1	Left Side Panel Assembly
2	Horizontal Bar
3	M6 X 20mm Socket Head Screw, M6 Butt Fastener
4	Safety Switch
5	Back Glass
6	Safety Switch Mount Plate
7	Right Side Panel Assembly
8	Handset Component
9	Rubber Mat
10	M6X30mm Socket Head Screw
11	M6 C'bore Butt Fasteners
12	M6X20mm Socket Head Screw
13	Front Door

1. Cut the slits for the enclosure legs on the rubber mat (Item 9) with a knife.
2. Remove the handset component (Item 8) from the frame, disconnect the cable with the handset, and remove the aluminum column from the frame.
3. Position the right-side panel assembly (Item 7) on the frame base, and thread four M6X30 socket head screws (Item 10) through the holes on the frame.Do not over-tighten. You can position for alignment after the left side panel (Item 1) and horizontal bar (Item 12) are installed.
4. Put two M6 C'Bore butt fasteners (Item 11) in the slots in the right-side panel.
5. Position the handset component on the right-side panel assembly (Item 7) and connect the cable as done previously. Insert two M6X20mm socket head screws (Item 12) and hand-tighten.
6. Repeat Steps 3 through 5 for the left-side panel assembly (Item 1).
7. Install the rear of the enclosure prior to mounting the lower horizontal bar (Item 2) in the back of the enclosure with the M6 butt fastener (Item 3). Then insert the back glass (Item 5) into the slots in the side panel, and install the remaining two horizontal bars (Item 2) with the M6 butt fastener (Item 3).
8. When all of the above components are aligned, hand-tighten all fasteners.

9. Install the safety switch. Prior to assembling the safety switch mount plate (Item 6), put the cable of the safety switch (Item 4) along the groove in a left-ward direction. (The cable is pre-mounted in the slot of the right-side panel assembly). Using two M6 X 20mm socket head screws and the M6 C'bore butt fasteners, mount the safety switch mount plate to the side panel.
10. Position the safety switch (Item 4) with the arrow-on switch pointing forward. Using the M4 x 35mm crossed discal screws and M4 washers, mount the switch to the safety switch mount plate.
11. Place the front door (Item 13) into position and secure the hinges to the left-side panel's hinges.
12. Check for proper alignment of the safety switch and adjust as needed.
13. Remove the protective covering from the panels and door.

When the assembly is completed, it should look like the previous figure.

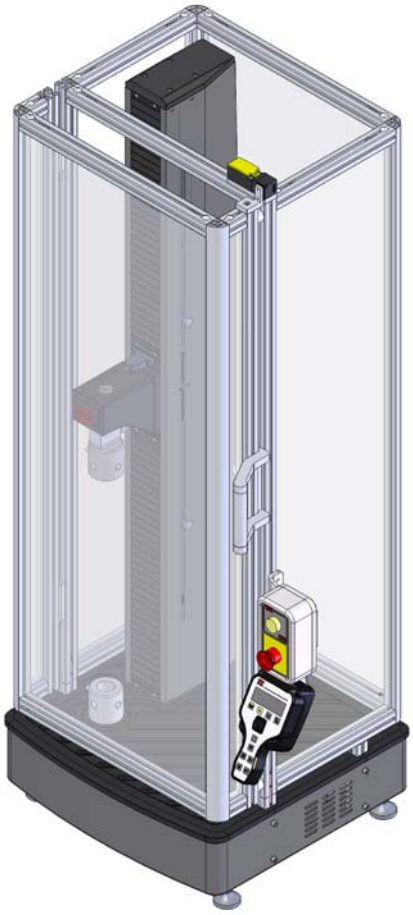

Model C41 Load Frame with Enclosure

C42 model

A typical installation procedure for installing an enclosure for C42 single-column units is provided following the figure.

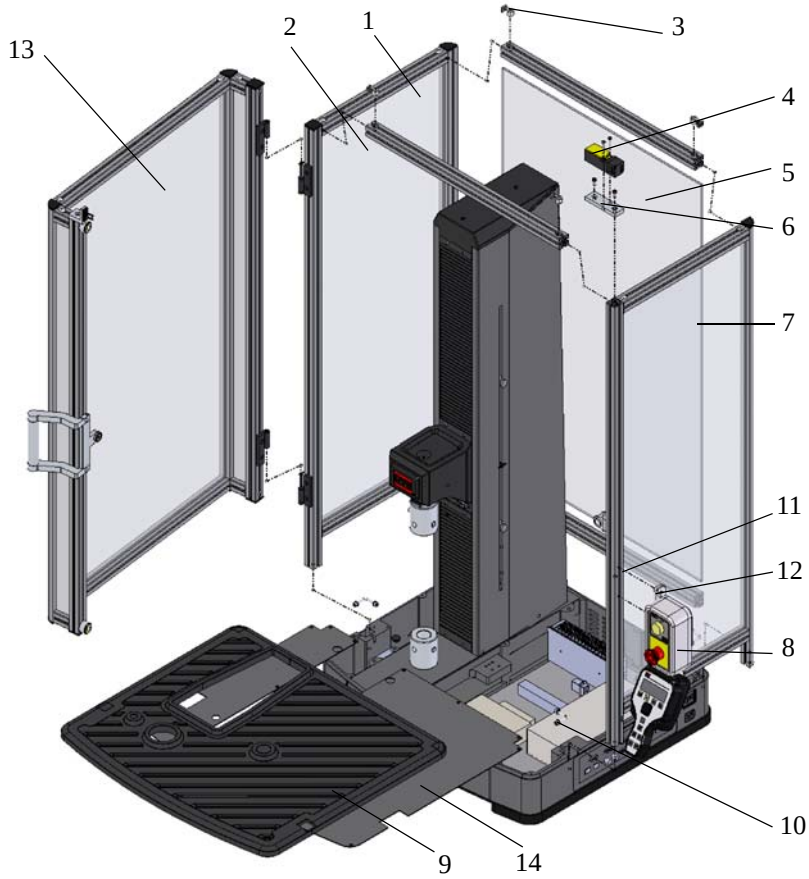

Item	Description
1	Left Side Panel Assembly
2	Horizontal Bar
3	M6 X 20mm Socket Head Screw, M6 Butt Fastener
4	Safety Switch
5	Back Glass
6	Safety Switch Mount Plate
7	Right Side Panel Assembly
8	Handset Component
9	Rubber Mat
10	M6X30mm Socket Head Screw

11	M6 C'bore Butt Fasteners
12	M6X20mm Socket Head Screw
13	Front Door
14	Sheet Metal Cover

1. Remove the rubber mat (Item 9), the sheet metal cover (Item 14), and the handset component (Item 8) from the frame. Disconnect the cable with the handset; remove the aluminum column from the frame.
2. Cut the slits for the enclosure legs on the rubber mat (Item 9) with a knife.
3. Position the right-side panel assembly (Item 7) on the frame base, and thread four M6x30 socket head screws (Item 10) through the holes on the frame.Do not over-tighten. You can position for alignment after the left-side panel (Item 1) and horizontal bar (Item 12) are installed.
4. Insert two M6 C'Bore butt fasteners (Item 11) in the slots in the right-side panel.
5. Position the handset component on the right-side panel assembly (Item 7) and connect the cable as done previously. Insert two M6X20mm socket head screws (Item 12) and hand-tighten.
6. Repeat Steps 3 through 5 for the left-side panel assembly (Item 1)
7. When all of the above components are aligned, hand-tighten all the fasteners.
8. Remount the sheet metal cover and rubber mat as done previously
9. Install the rear of the enclosure prior to mounting the lower horizontal bar (Item 2) in the back of the enclosure with the M6 butt fastener (Item 3). Then insert the back glass (Item 5) into the slots in the side panel, and install the remaining two horizontal bars (Item 2) with the M6 butt fastener (Item 3).
10. Install the safety switch. Prior to assembling the safety switch mount plate (Item 6), put the cable of the safety switch along the groove in a left-ward direction. (The cable is pre-mounted in the slot of the right-side panel assembly). Using two M6 X 20mm socket head screws and the M6 C'bore butt fasteners, mount the safety switch mount plate to the side panel.
11. Position the safety switch (Item 4) with the arrow-on switch pointing forward. Using the M4 x 35mm crossed discal screws and M4 washers, mount the switch to the safety switch mount plate.
12. Place the front door (Item 13) into position and secure the hinges to the left-side panel’s hinges.
13. Check for proper alignment of the safety switch and adjust as needed.
14. Remove the protective covering from the panels and door.

When the assembly is completed, it should look like the previous figure.

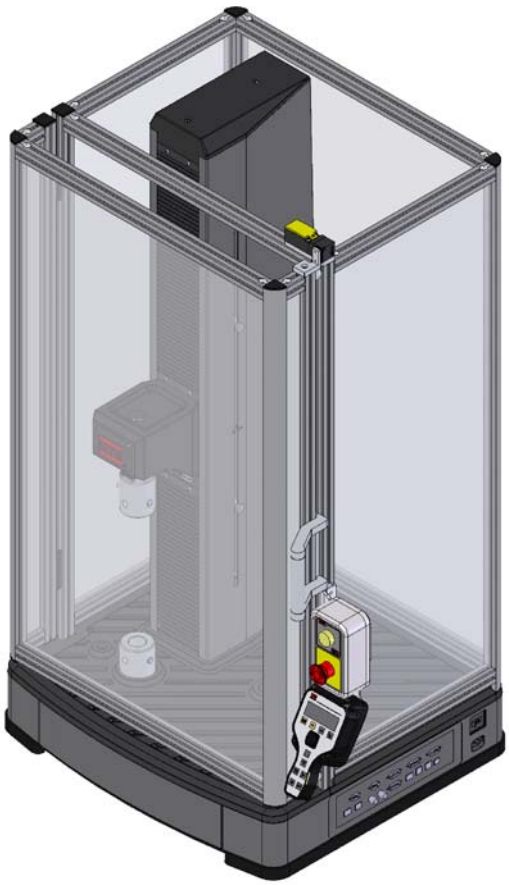

Model C42 Load Frame with Enclosure

Dual-Column Load Frames

The optional enclosure for dual-column load frames is comprised of a front of enclosure and a rear of enclosure, which completely encloses the test space.

When shipping, front door and back door of enclosure are removed from the frame and packaged separately. After the frame is placed in its testing location, you need to install enclosure.

Front of dual-column units

A typical installation procedure for installing the front enclosure for dual-column units is provided following the figure.

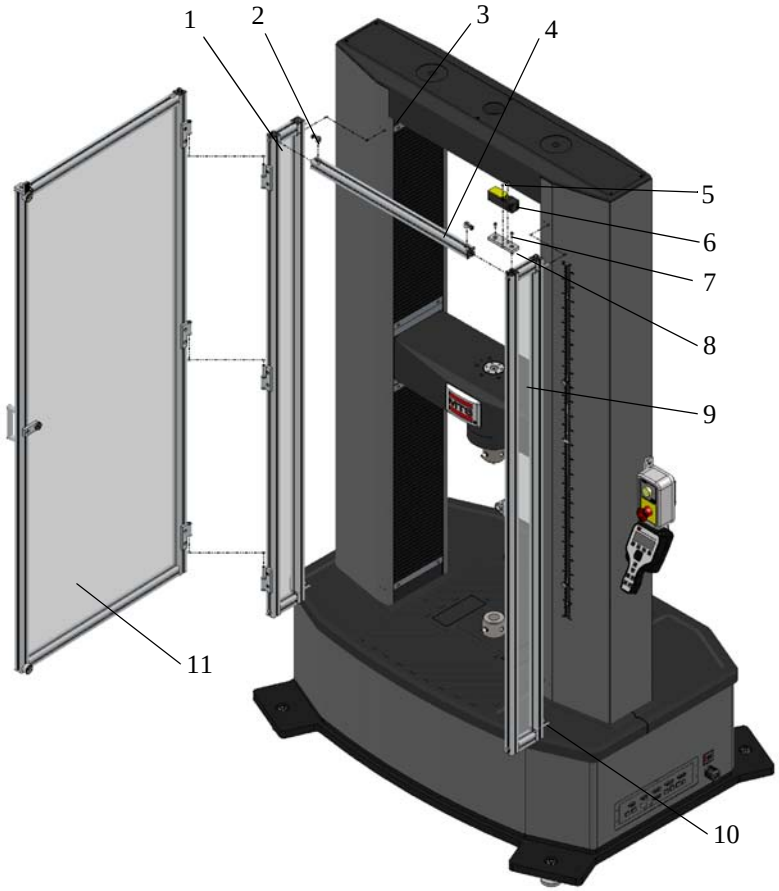

Front of Dual-Column Load Frame

ITEM	DESCRIPTION
1	Left Side Panel Assembly
2	M6 Butt Fastener
3	M6 X20 mm Socket Head Screw
4	Horizontal bar
5	M4X35 mm Crossed Discal Screws
6	Safety Switch
7	M6X25 mm Socket Head screw
8	Safety Switch Mount Plate
9	Right Side Panel Assembly
10	M6 X40 mm Socket Head Screw
11	Front Door

1. Remove the M6 X 20mm socket head screws (Item 3) from the frame.
2. Position the left-side panel assembly (Item 1) on the frame base, and thread the screws through the holes on the frame.
3. Secure the left-side panel to the frame using four M6X40 mm socked head screws (Item 10). Do not over-tighten. You can position for alignment after the right-side panel (Item 9) and horizontal bar (Item 4) are installed.
4. Repeat Steps 2 and 3 for the right-side panel assembly (Item 9).
5. Use the M6 butt fasteners (Item 2) to connect the horizontal bar (Item 4) and the side panel.
6. When the all of above components are aligned, hand-tighten all fasteners.
7. Install the safety switch. Prior to assembling the safety switch mount plate (Item 8), put the cable of the safety switch along the groove in a left-ward direction. (The cable is pre-mounted in the slot of the right-side panel assembly). Using two M6 X 20mm socket head screws and the M6 C'bore butt fasteners, mount the safety switch mount plate to the side panel.
8. Position the safety switch (Item 6) with the arrow-on switch pointing forward. Using the M4 x 35mm crossed discal screws (Item 5) and M4 washers, mount the switch to the safety switch mount plate.
9. Place the front door (Item 11) into position and secure the hinges to the left-side panel’s hinges.
10. Check for proper alignment of the safety switch and adjust as needed.

Rear of dual-column load frames

A typical installation procedure for installing the rear enclosure for dual-column units is provided following the figure.

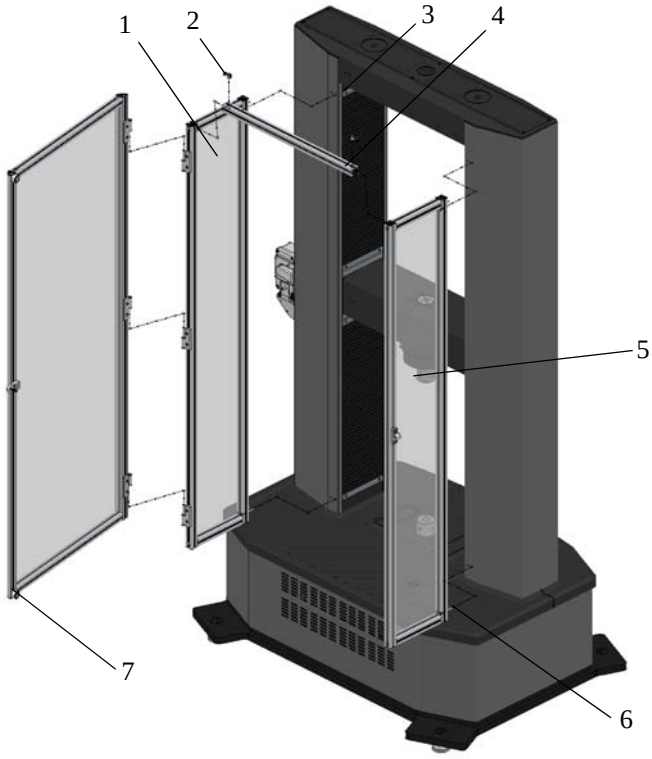

Rear of Dual-Column Load Frame

ITEM	DESCRIPTION
1	Left Side Panel Assembly
2	M6 Butt Fastener
3	M6 X20 mm Socket Head Screw
4	Horizontal Bar
5	Right Side Panel Assembly
6	M6 X40 mm Socket Head screw
7	Back Door

1. Remove the M6 X 20mm socket head screws (Item 3) from the frame.
2. Position the left-side panel assembly (Item 1) on the frame base, and thread the screws through the holes on the frame.
3. Secure the left-side panel to the frame using four M6X40 mm buttonhead cap screws (Item 6). Do not over-tighten. You can position for alignment after the right-side panel (Item 5) and horizontal bar (Item 4) are installed.

4. Repeat Steps 2 and 3 for the right-side panel assembly (Item 5).
5. Use the M6 butt fasteners (Item 2) to connect the horizontal bar (Item 4) and the side panel.
6. When the all of above components are aligned, hand-tighten all fasteners.
7. Place the back door (Item 7) into position with the door latch to the right side and secure the hinges to the left-side panel's hinges.
8. Adjust the latch to align exactly with the door catch as needed.
9. Remove the protective covering from the panels and door.

When the assembly is completed, the image below is the final effect.

Dual-Column Load Frame With Enclosure

Controller Connections

Connecting the Main Power

1 kN through 100 kN

The input voltage of MTS Criterion frames rated 100 kN or less is single phase 200-230 V, 50/60 Hz.

Note *Local electrical codes supercede any information found here.*

For MTS Criterion frames equal or less than 10 kN, use 3 holes type I socket (C13 style on the Criterion) for power input, specification of power wire is H05VV-F,3G1 mm^2, compatible with standards of KEMA-KEUR, CEBEC, +S+S+S, VDE, SABS, IEMMEQU for certification.

For MTS Criterion frames more than 10 kN, use the 3-wires cable that is provided for power input, and connect to the customer electrical box and disconnect. The type of power cable is listed below:

- 10 kN~50 kN - HO7RN-F 3G2.5 mm^2, compatible with standards of ELOT, PECSO for certification.
- 100 kN - HO7RN-F 3G4 mm^2, compatible with IEMMEQU, PECSO for certification.

Note *Electrical connections must be made by qualified personnel and is their responsibility for using the proper power disconnect that conforms to local codes and regulations when connecting the machine to the building's main power.*

300 kN through 600kN

The input voltage of MTS Criterion frames rated 300kN or more is three phases 380-480 V, 50/60 Hz.

For MTS Criterion frames more than 10 kN, use the 3-wires cable that is provided for power input, and connect to the customer electrical box and disconnect. The type of power cable is : HO7RN-F 3G4 mm^2, compatible with IEMMEQU, PECSO for certification.

Electrical disconnect

The customer is responsible for providing an electrical power disconnect that is easy to operate and easy to reach. It must also meet IEC 60947-1 and IEC 60947-3 standards.

Recommended circuit breaks would be ones that are of the thermal magnetic type with characteristics suitable for large inductive loads (D-type trip characteristic). If fuses are used, It is recommended that they are of the time-delay type with dual elements. These recommendations should be followed to avoid nuisance tripping.

Installing Cables

Exercise care when connecting cables. Ensure that you are using the correct cables and that all connections are secure. When you are finished, double-check to ensure that all components are connected properly.

To maintain EMC compliance and help ensure optimal performance, MTS recommends ordering all system cables from MTS. Cables should be installed so that they are protected from conditions that could damage the cable.

CAUTION

There is dangerous voltage inside the machine.

Connecting cables with power applied can cause damage to the equipment.

Ensure that the power is turned off before connecting cables.

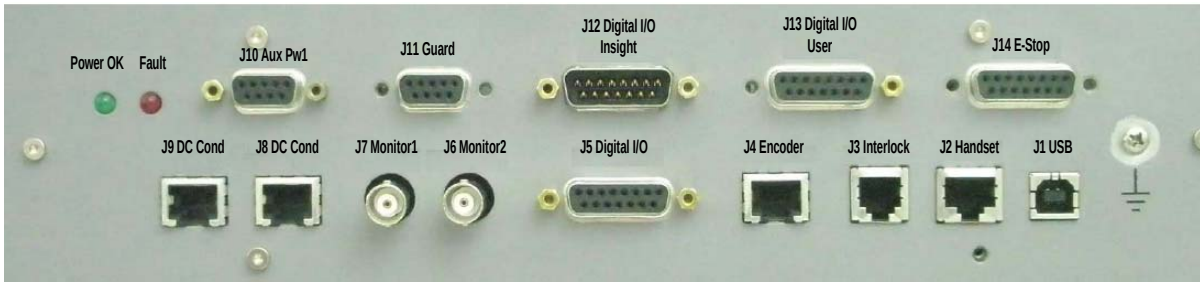

Controller connectors

J1 USB

This is a standard USB 2.0 connector that accepts a USB-B cable connector and connects to the computer. This provides a communications interface between the testing software on the PC and the controller. This is used to allow the software to change settings in the controller and to receive data from the controller.

J2 Handset

This is intended to interface to the handset. Specifics for this connector are:

- 12 V output power with 200 mA current limit
- RS422 driver (differential)
- RS422 receiver (differential)
- Interlock input. Handset shorts between INTLK+ and INTLK- when it is connected.
- 8-pin RJ-45 connector

Pin assignments are as follows:

PIN	SIGNAL
1	Transmit+
2	Transmit-
3	+12 V
4	INTLK+
5	INTLK-
6	Analog GND
7	Receive+
8	Receive-

J3 Interlock

J3 is intended for remote interlock connection. If not used, jumper plug P/N 049-635-901 must be installed to enable system interlocks to be cleared.

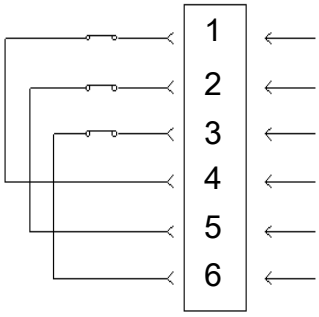

J4 Encoder

This connector is intended for encoder-based transducers. Specifics for this connector are:

- Power: +5 V +/- 0.25 V at 100 mA max
- Signals: Quadrature A and B with index I
- Logic: Differential receivers (can connect single ended)
- Maximum Rate: 100,000 lines/sec = 400,000 counts/sec

Pin assignments are as follows:

PIN	SIGNAL
1	TEDS data
2	A+
3	A-
4	+5 V
5	I+
6	I-
7	Analog GND
8	B+
9	B-
10	TEDS ground

J5 Digital I/O

The J5 connector routes the Digital I/O from the MTS Insight control board to J12 on the MTS Criterion interface board. The pin assignment below is only for reference. The cable from J5 to J12 must be connected for system operation.

PIN	SIGNAL
1	DIN1+
2	DIN2+
3	DIN3+
4	DOUT1+
5	DOUT2+
6	DOUT3+
7	No Contact
8	+12 V
9	DIN1-
10	DIN2-
11	DIN3-
12	DOUT1-
13	DOUT2-
14	DOUT3-
15	Analog GND

J6 and J7 Monitor

Two monitor connectors are provided. There are several possible uses for analog monitor outputs: external data acquisition, tuning, troubleshooting, and so forth. For tuning, it is desirable to monitor command and feedback, or command and error, simultaneously while changing the controller parameters. Therefore, two monitor outputs are provided. Specifics for these connectors are:

- Analog +/-10.5 V
- Calibrated to +/-10 V
- 16-bit resolution minimum
- BNC connectors

J8 and J9 DC Conditioner

Two external DC conditioner connectors are provided. Up to two external transducers can be connected such as: axial or transverse extensometers, biaxial extensometer, auxilary load cells, pressure gages, LVDTs (with external conditioning), or strain-gaged components.

Pin assignments are as follows:

Pin	Signal
1	TEDS data
2	EX+
3	EX-
4	FB-
5	RCAL1 (FBR+)
6	RCAL2 (FBR-)
7	FB+
8	EXS-
9	EXS+
10	TEDS ground

J10 Aux Pw1

The connector is the auxilary Power connector. It can provide power to external devices. Pin assignments are as follows:

Pin	Signal	
1	+12 V	400 mA (max combined with Pin 6)
2	AGND	
3	-12 V	400 mA max
4	PGND	
5	+5 V	400 mA max
6	+12 V	400 mA (max combined with Pin 1)
7	AGND	
8	DGND	
9	+24 V	400 mA max

J11 Guard

The connector should be connected to the safety system (Enclosure switch) or jumpered for crosshead motion.
The enclosure switch has two NC contacts. One must be connected between Pin 1 and Pin 6. The other must be connected between Pin 2 and Pin 7.
GUARD_CONFIG1/2-jumpers determine if crosshead motion slows to 540 mm/min or comes to a complete stop when the enclosure door opens. That is to say,
No Jumpers = complete stop with door open.
Jumpers from Pin3-Pin8 and Pin5-Pin9 = crosshead slows to 540 mm/min with the enclosure door open.

Pin assignments are as follows:

PIN	SIGNAL
1	GUARD1A+
2	GUARD2A+
3	GUARD_CONFIG1+
4	No Contact
5	GUARD_CONFIG2-
6	GUARD1A -
7	GUARD2A-
8	GUARD_CONFIG1-
9	GUARD_CONFIG2+

J12 Digital I/O Insight

The J12 connector routes the Digital I/O from the MTS Insight control board to J5 on the MTS Criterion interface board. The pin assignment below is only for reference. The cable from J12 to J5 must be connected for system operation.

PIN	SIGNAL
1	VCC
2	No Contact
3	DOUT3+
4	DOUT2+
5	DOUT1+
6	DIN3+
7	DIN2+
8	DIN1+
9	GND
10	DOUT3-
11	DOUT2-
12	DOUT1-
13	DIN3-
14	DIN2-
15	DIN1-

J13 Digital I/O User

Digital I/O signals include three optically isolated inputs, three optically isolated outputs, and 12 V power. Functions of each digital input or output are software selectable. A typical example might be connecting an external switch; see "Additional Digital I/O Information" on page 125. Only DIN1 and DOUT2 & 3 are available for external use. DIN2 & DOUT1 are used for Fault Status communications with the software. DIN3 is used for Enclosure door switch status. Pin assignments are as follows:

Note *If the optional enclosure is not used, DIN3 is still required by the control system to bypass the low-speed safety system.*

PIN	SIGNAL
1	DIN1+
2	DIN2+
3	DIN3+
4	DOUT1+
5	DOUT2+
6	DOUT3+
7	No Contact
8	VCC
9	DIN1-
10	DIN2-
11	DIN3-
12	DOUT1-
13	DOUT2-
14	DOUT3-
15	Analog GND

J14 E- Stop

This connector is intended to connect to a remote Emergency-Stop switch. If not used, a jumper plug must be installed. If you are building a cable, the maximum length is 30.48 m (100 ft) with 18 AWG. The switch should be wired normally closed, such that when the switch is pressed, an interlock is generated. Pin assignments are as follows:

- ESTOP3 = emergency stop switch with two sets of contacts (optional remotely mounted).
- ESTOP_OUT = optional ESTOP output for accessory, includes two contact outputs and one feedback. For use with pneumatic/hydraulic grip controls, furnaces, environmental chambers, and so on.

Pin	Signal
1	ESTOPB_OUT-
2	No Contact
3	ESTOP_OUT_MONITOR-
4	ESTOP_OUT_MONITOR+
5	ESTOP3B+
6	ESTOPA_OUT-
7	ESTOP3B-
8	ESTOP3A+
9	ESTOPB_OUT+
10	No Contact
11	No Contact
12	No Contact
13	ESTOP3A-
14	ESTOPA_OUT+
15	No Contact

Crosshead load cell connector

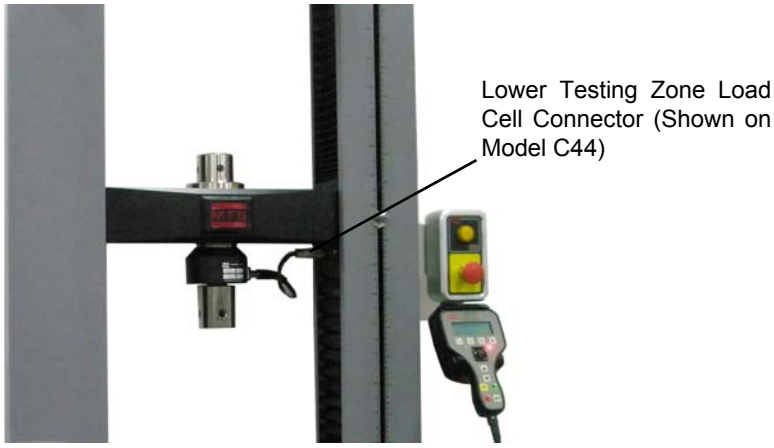

For a single-testing zone material testing system, there is a connector for the load cell under the crosshead on one of the columns. For an optional dual-testing zone material testing system, there is a connector for the load cell under the top beam on one of the columns, and there are two connectors for the load cell under the crosshead on one of the columns. When using the upper testing zone, the upper load cell is connected to the connector under the top beam on one of the columns, and the two connectors under the crosshead are connected by a jumper cable. When using the lower testing zone, the lower load cell is connected to the back one of two connectors under the crosshead. Pin assignments are as follows:

PIN	SIGNAL
1	EX+
2	EX-
3	No Contact
4	FB+
5	FB-
6	No Contact
7	SHIELD
8	TEDS+
9	No Contact
10	EXS+
11	No Contact
12	RCAL1 (FBR+)
13	RCAL2 (FBR-)
14	TEDS-
15	EXS-

NI Signal Acquisition Box Mounting

The Model C45.504W frame can test with multiple load cells and multiple channels. If this configuration is desired, an NI Signal Acquisition Box is required. The typical mounting procedure follows.

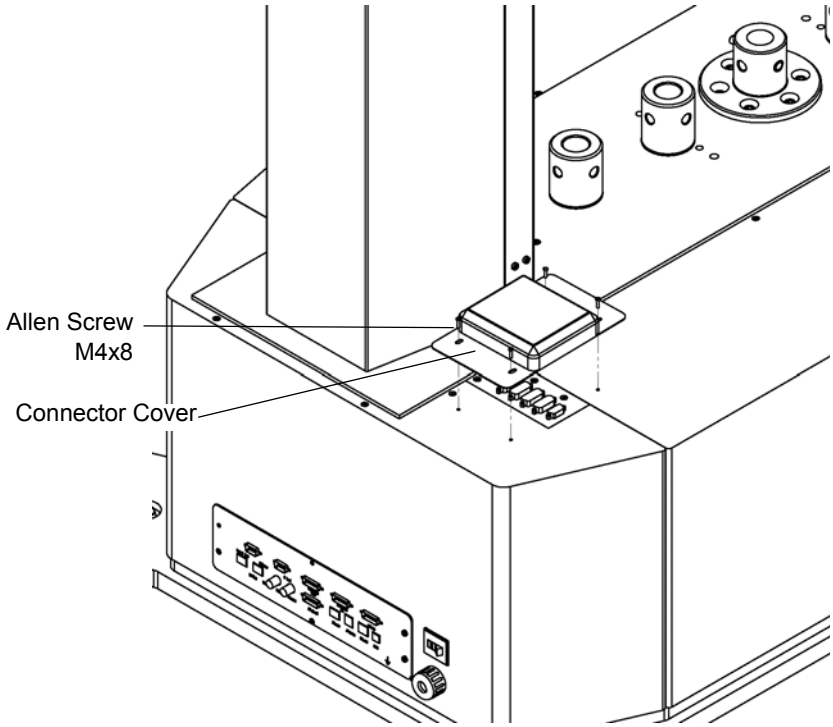

1. Twist down all fasteners with the Allen wrench and remove the connector cover from the base of the load frame.

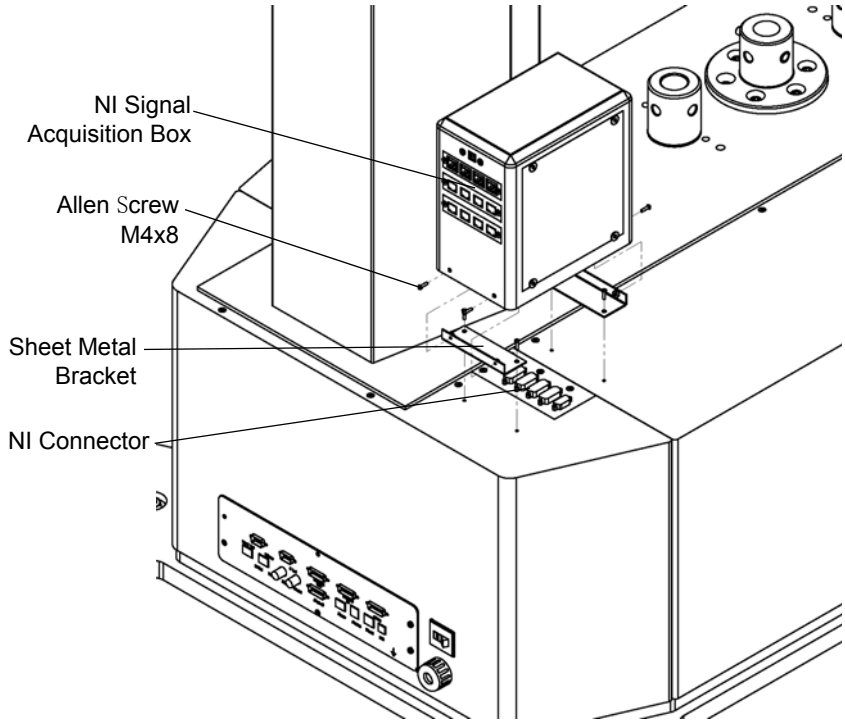

2. Secure the sheet metal bracket fo the base with four Allen screws M4x8.
3. Align the jacks and plugs of the NI connector, and then press down the NI Signal Acquisition Box to the right position.
4. Secure the box with four Allen screws and hand-tighten.

Accessory Mounting Dimensions

You can attach numerous testing accessories and fixtures to the load frame for specialized tests. The following figures show the standard mounting holes in each style of load frame. Use these standard mounting holes to mount your accessories. Avoid tapping new holes that may weaken or otherwise compromise the integrity of the load frame. The following sections describe each style of load frame separately. Look for the section pertaining to your specific model for the appropriate dimensions.

Note *All measurements in the following figures are shown in mm.*

Model C41 Accessory Mounting Dimensions

Base beam

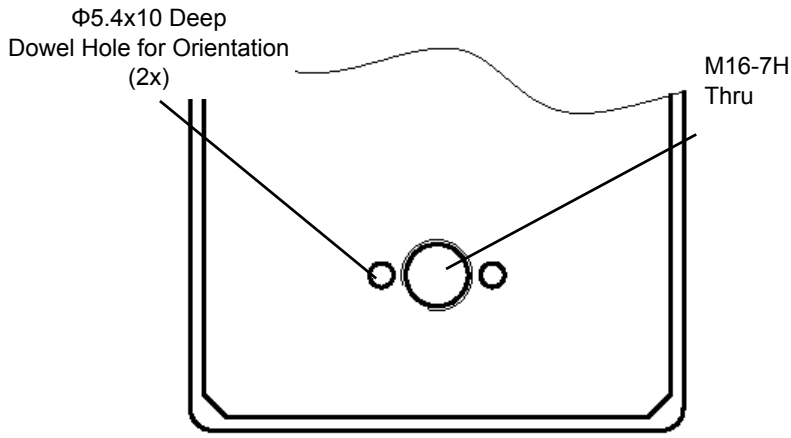

Model C41.103 Base Beam Mounting Dimensions

Crosshead

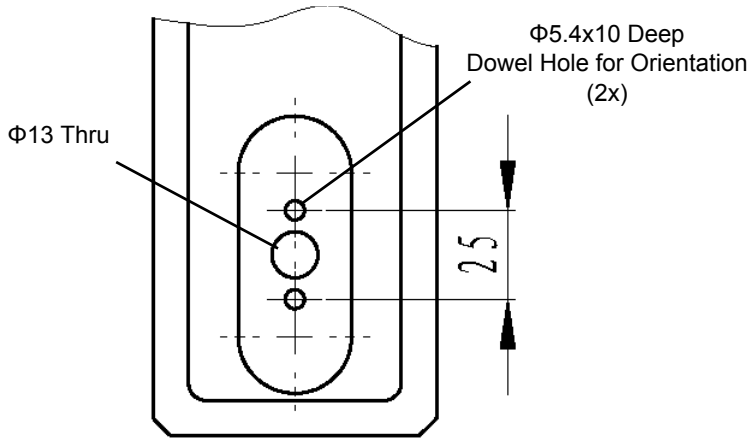

Model C41.103 Crosshead Mounting Dimensions

Accesory Mounting

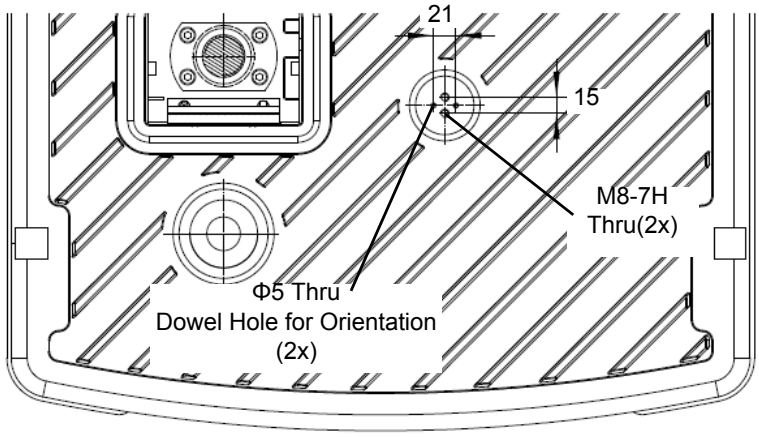

Model C41.103 Accessory Mounting Dimensions

Model C42 Accessory Mounting Dimensions

Base beam

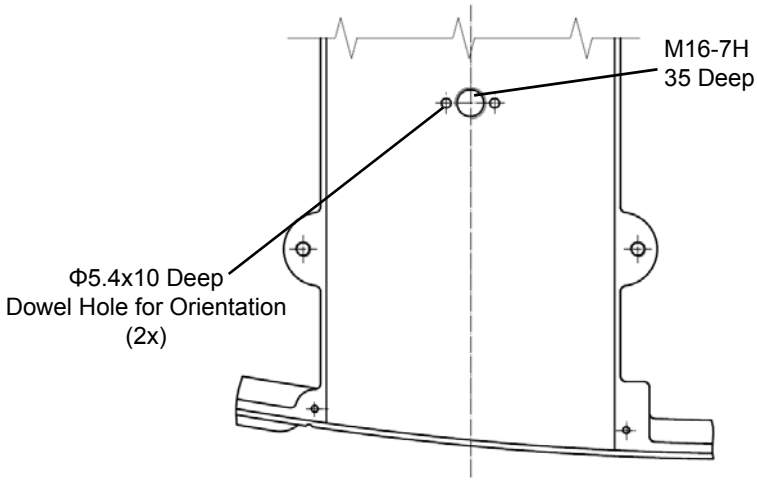

Model C42.503 Base Beam Mounting Dimensions

Crosshead

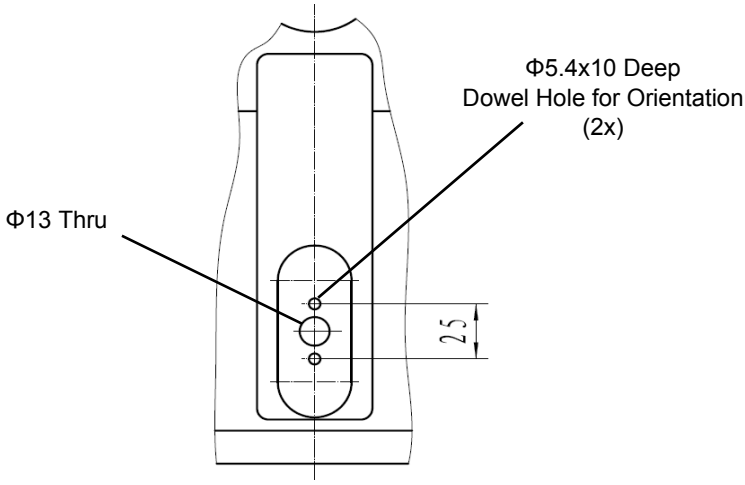

Model C42.503 Crosshead Mounting Dimensions

Top beam

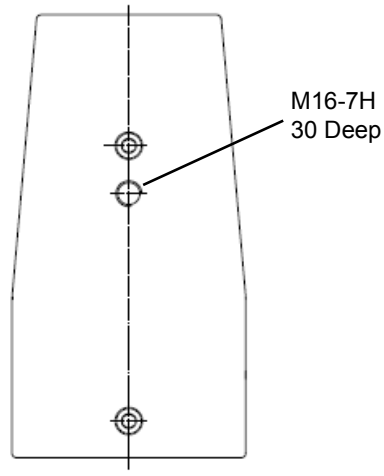

Model C42.503 Top Beam Mounting Dimensions

Accessory Mounting

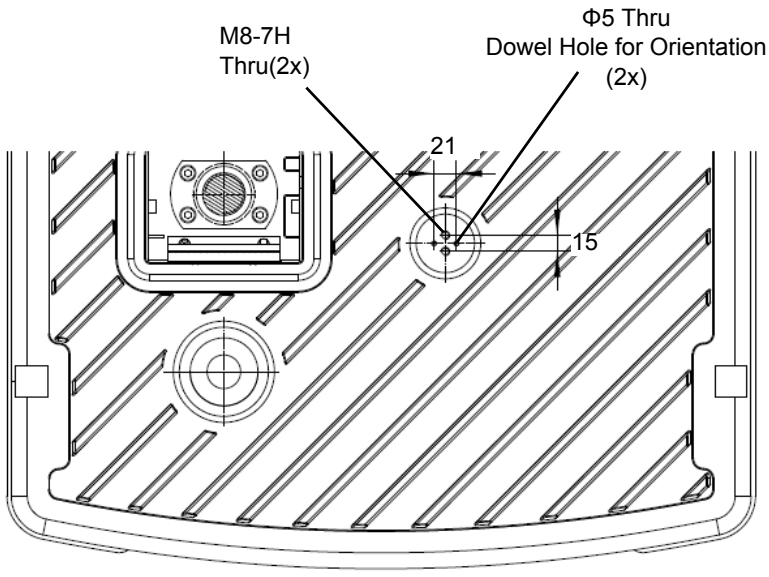

Model C42.503 Accessory Mounting Dimensions

Model C43 Accessory Mounting Dimensions

Base beam

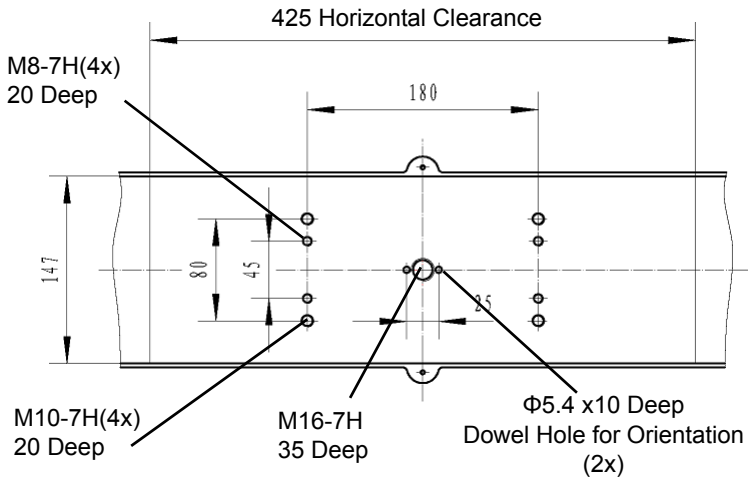

Model C43.104 Base Beam Mounting Dimensions

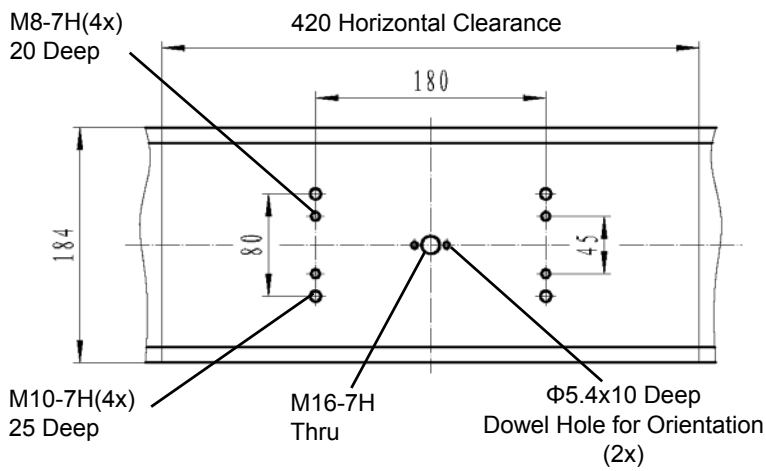

Model C43.304/C43.504 Base Beam Mounting Dimensions

Crosshead

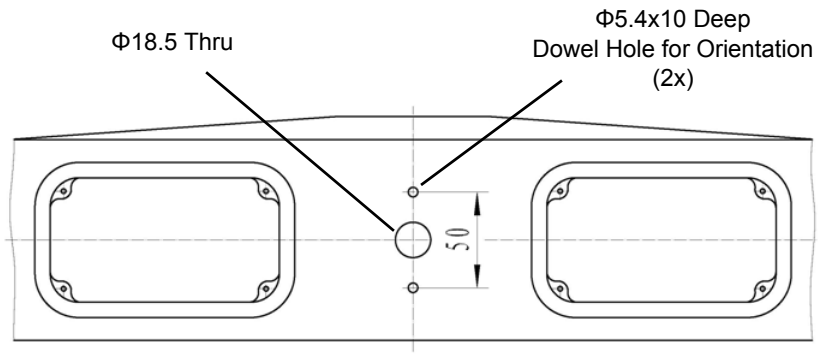

Model C43.104 Crosshead Mounting Dimensions

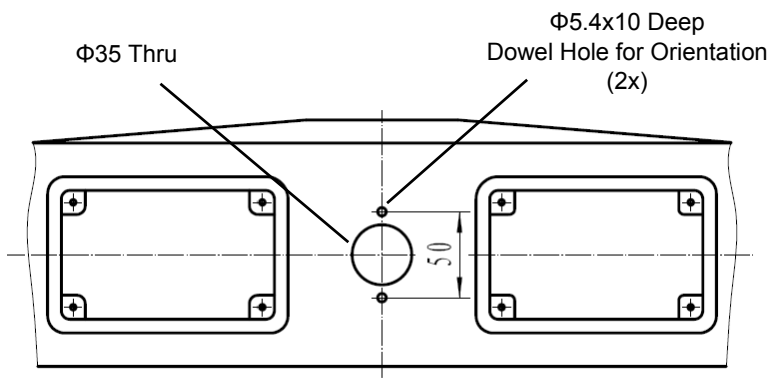

Model C43.304/C43.504 Crosshead Mounting Dimensions

Top beam

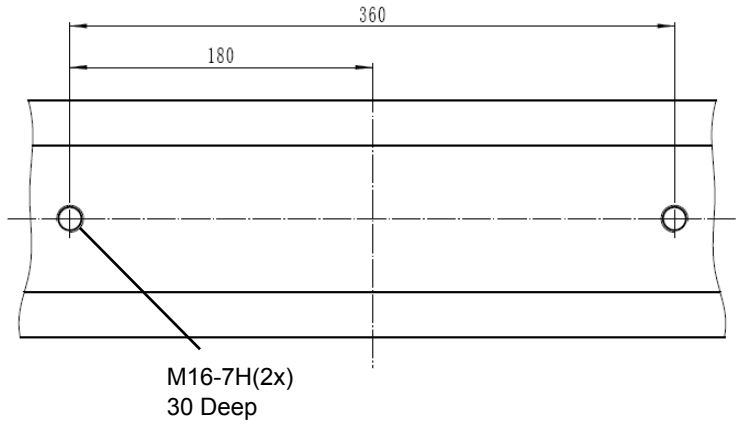

Model C43.104 Top Beam Mounting Dimensions

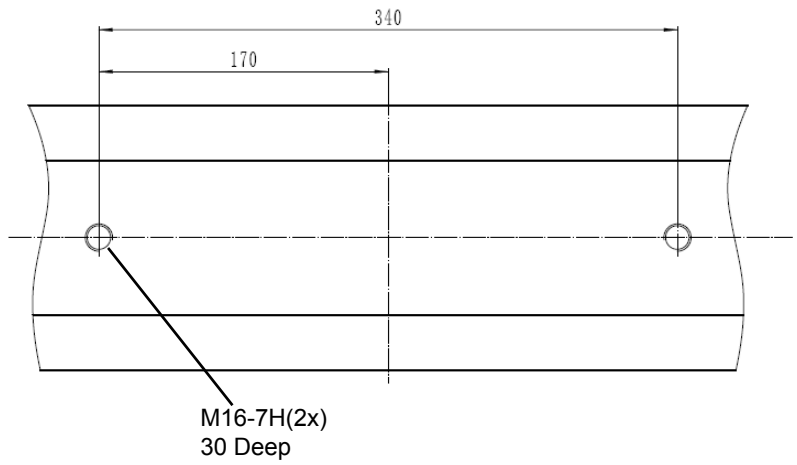

Model C43.304/C43.504 Top Beam Mounting Dimensions

Model C44 Accessory Mounting Dimensions

Base beam

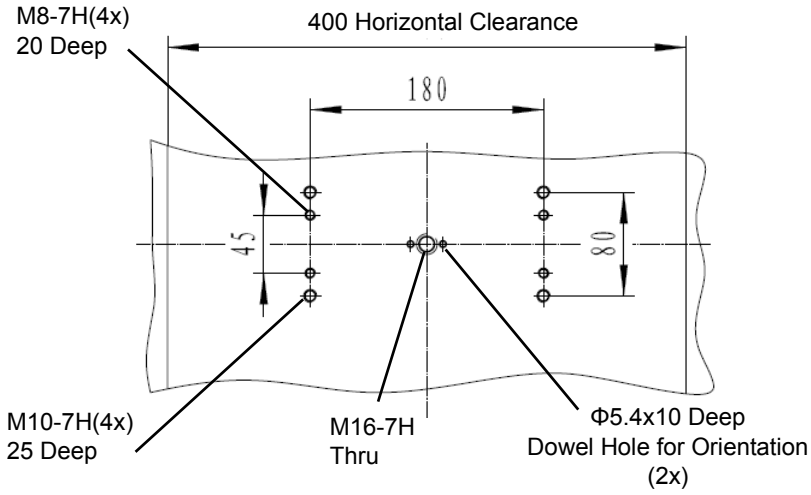

Model C44.104/C44.304 Base Beam Mounting Dimensions

Crosshead

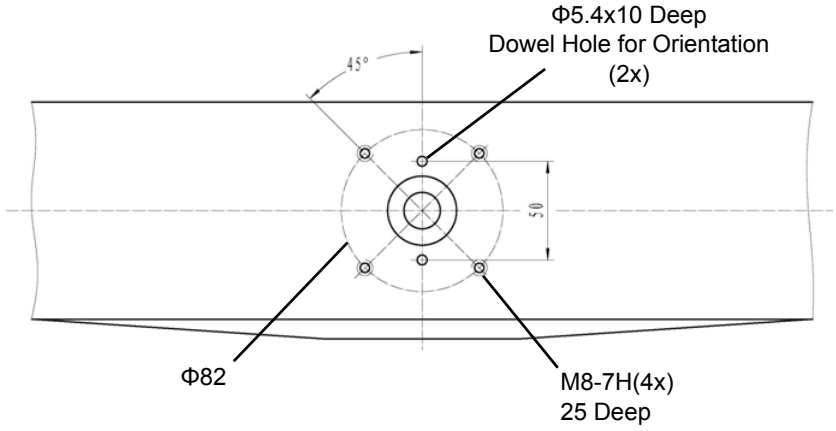

Model C44.104/C44.304 Topside of Crosshead Mounting Dimensions

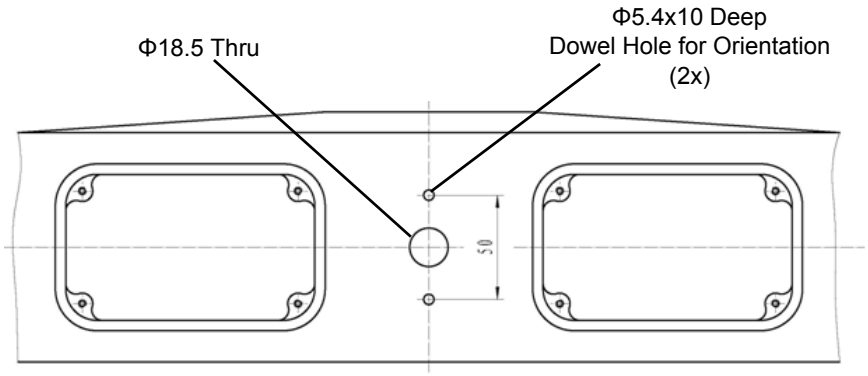

Model C44.104/C44.304 Underside of Crosshead Mounting Dimensions

Top beam

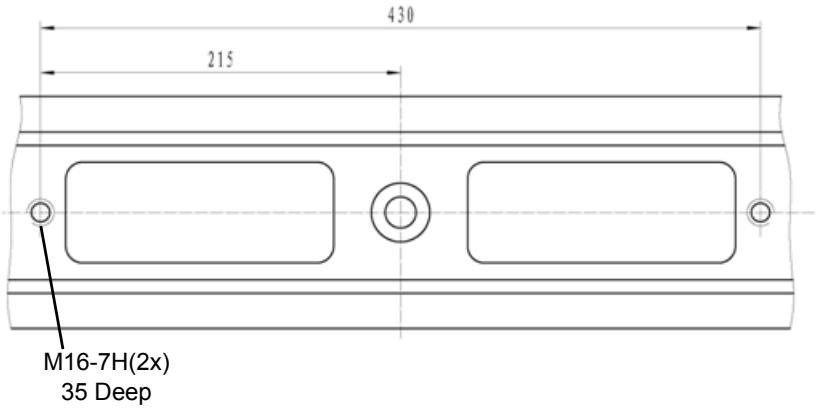

Model C44.104/C44.304 Topside of Top Beam Mounting Dimensions

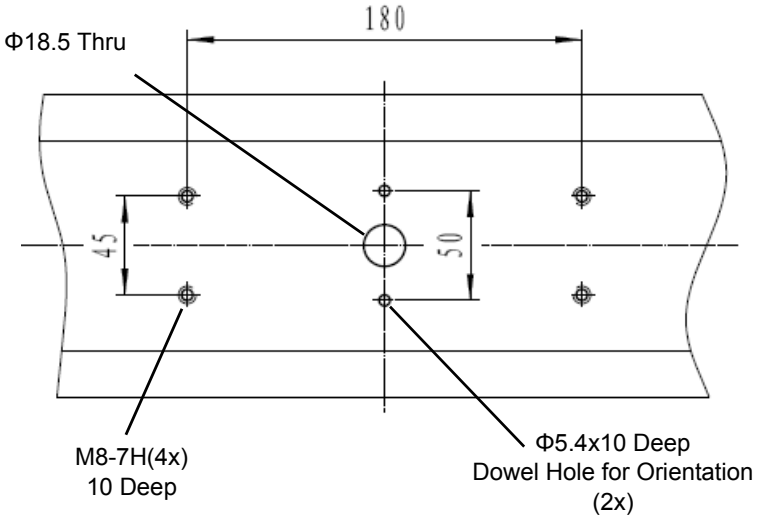

Model C44.104/C44.304 Underside of Top Beam Mounting Dimensions

Model C45.504W Accessory Mounting Dimensions

Base beam

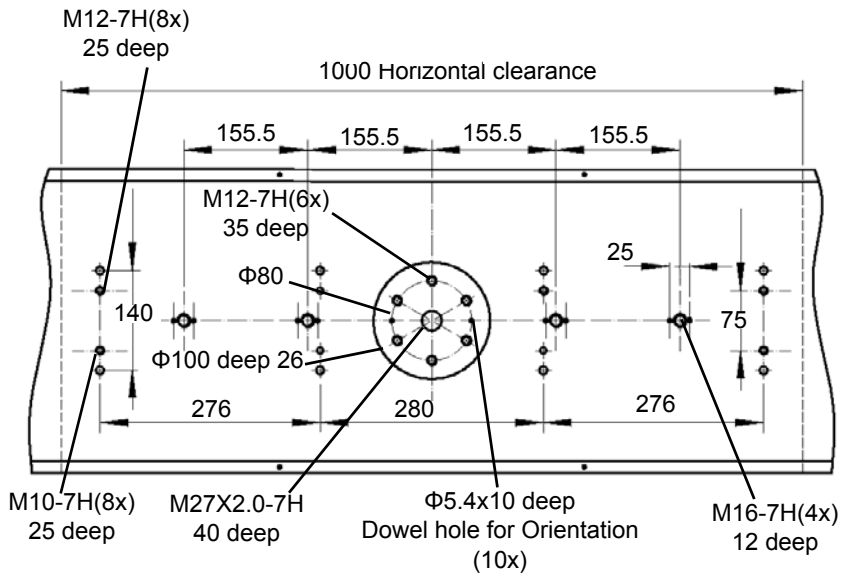

Model C45.504WBase Beam Mounting Dimensions

Crosshead

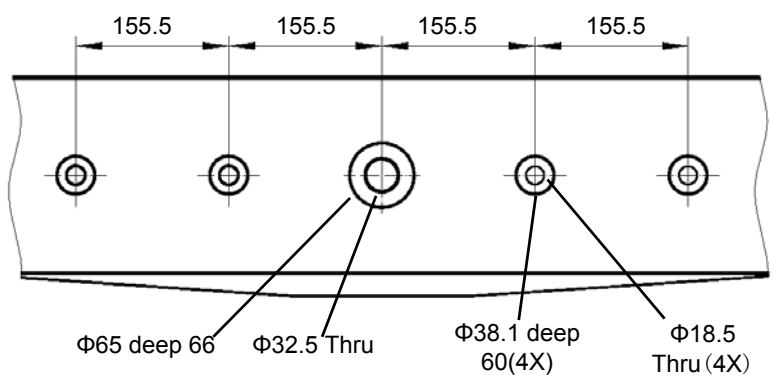

Model C45.504W Topside of Crosshead Mounting Dimensions

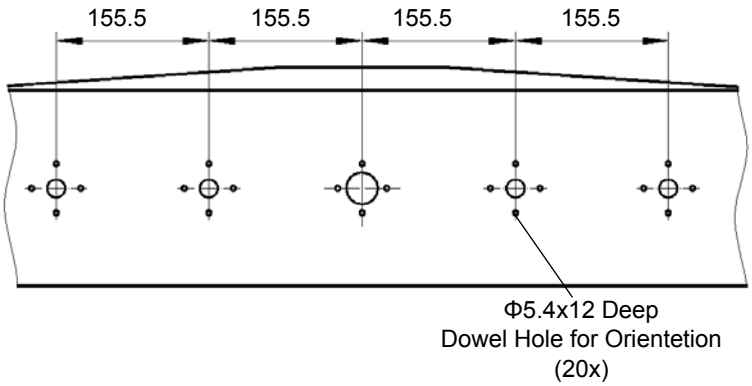

Model C45.504W Underside Crosshead Mounting Dimensions

Top beam

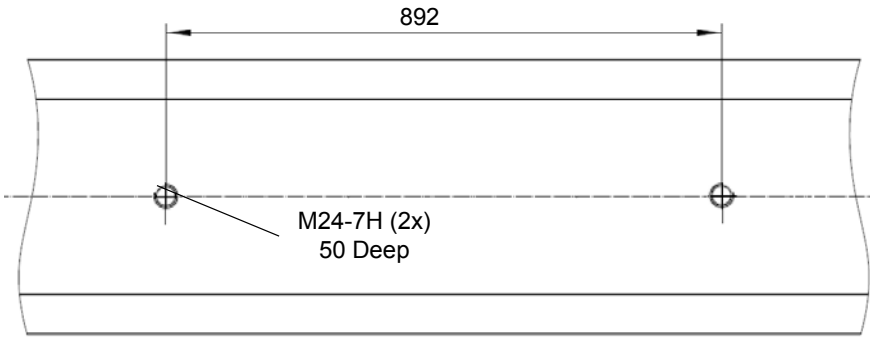

Model C45.504W Topside of Top Beam Mounting Dimensions

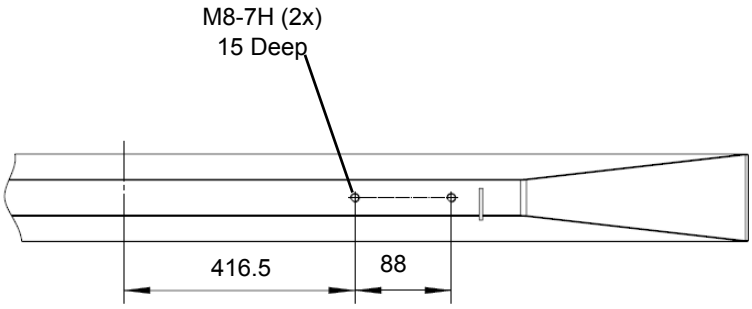

Model C45.504W Backside of Top Beam Mounting Dimensions

Model C45.504/C45.105 Accessory Mounting Dimensions

Base beam

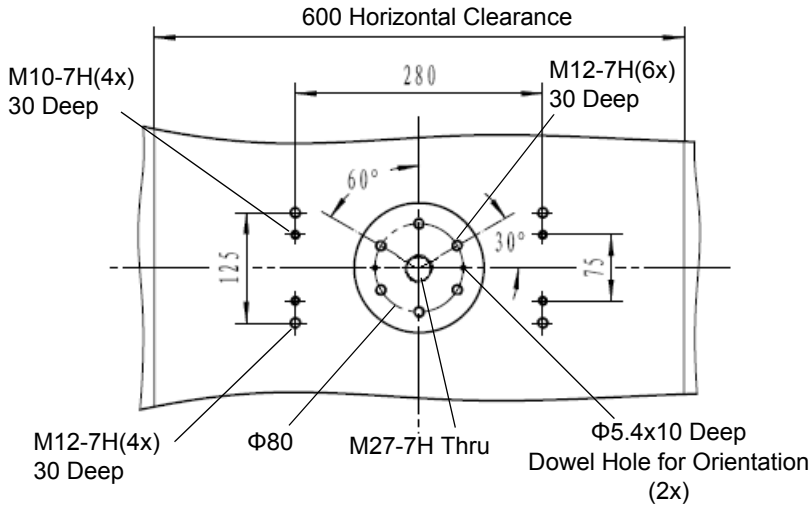

Model C45.504/C45.105 Base Beam Mounting Dimensions

Crosshead

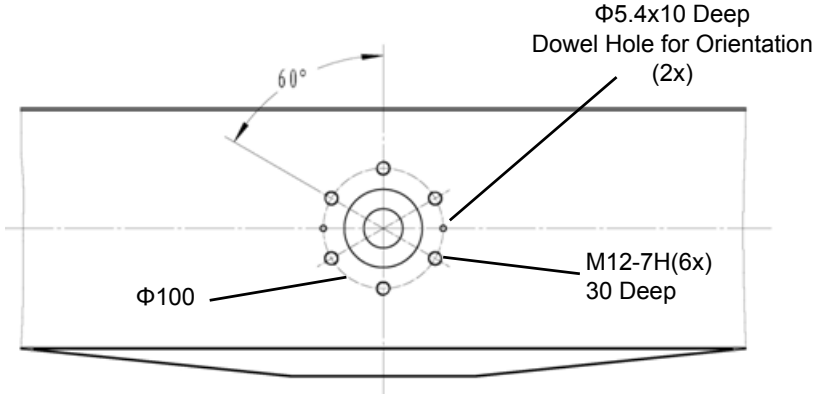

Model C45.504/C45.105 Topside of Crosshead Mounting Dimensions

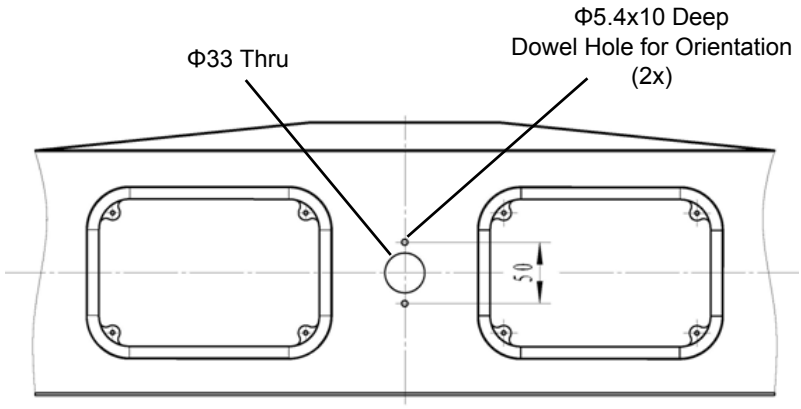

Model C45.504/C45.105 Underside of Crosshead Mounting Dimensions

Top beam

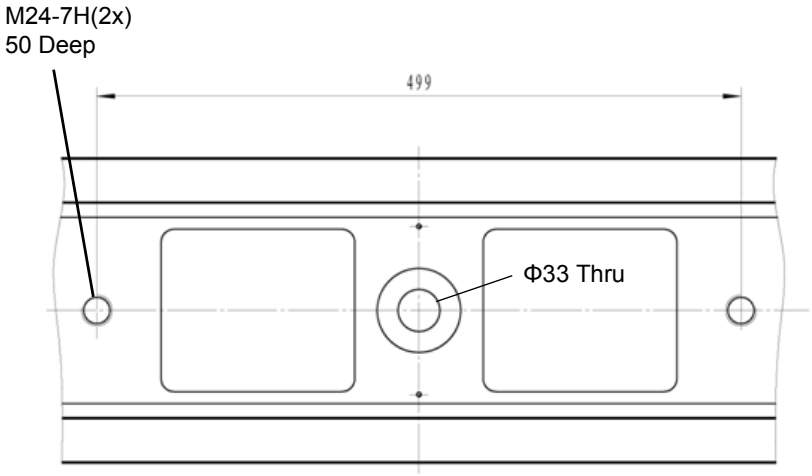

Model C45.504/C45.105 Topside of Top Beam Mounting Dimensions

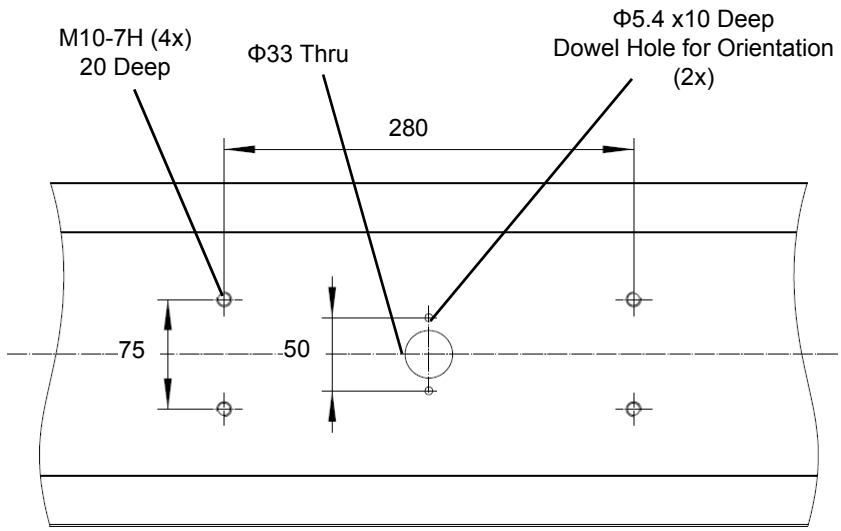

Model C45.504/C45.105 Underside of Top Beam Mounting Dimensions

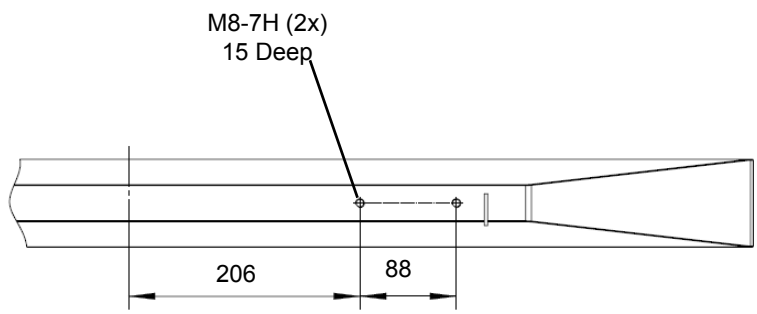

Model C45.504/C45.105 Backside of Top Beam Mounting Dimensions

Model C45.305 Accessory Mounting Dimensions

Base beam

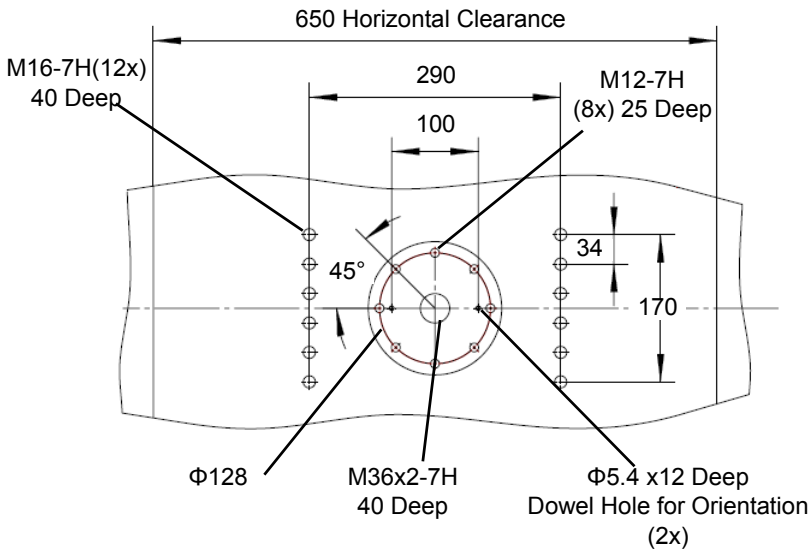

Model C45.305 Base Beam Mounting Dimensions

Crosshead

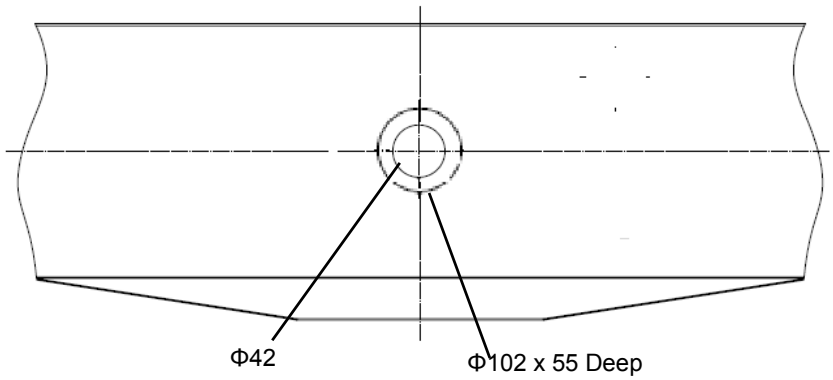

Model C45.305 Topside of Crosshead Mounting Dimensions

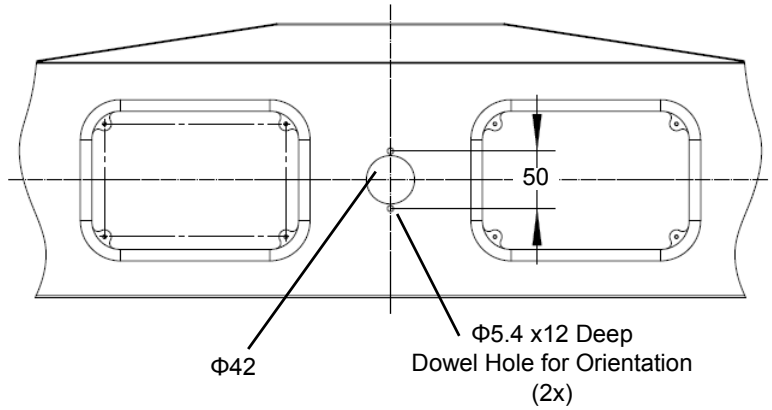

Model C45.305 Underside of Crosshead Mounting Dimensions

Top beam

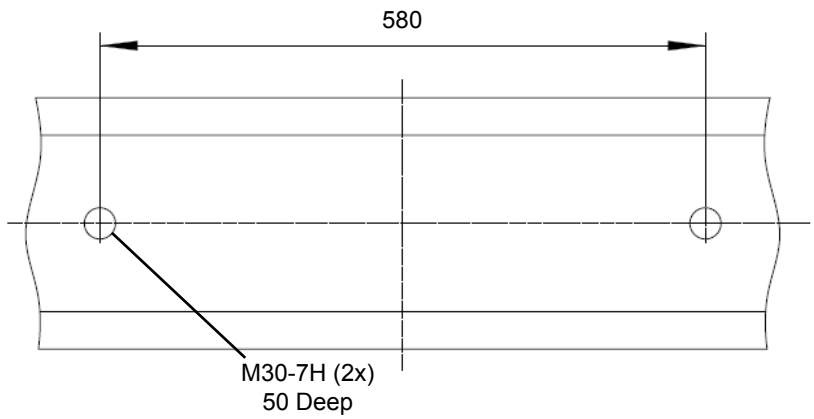

Model C45.305 Topside of Top Beam Mounting Dimensions

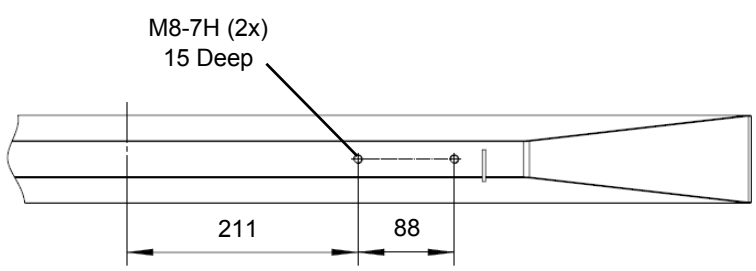

Model C45.305 Backside of Top Beam Mounting Dimensions

Model C45.605Accessory Mounting Dimensions

Base beam

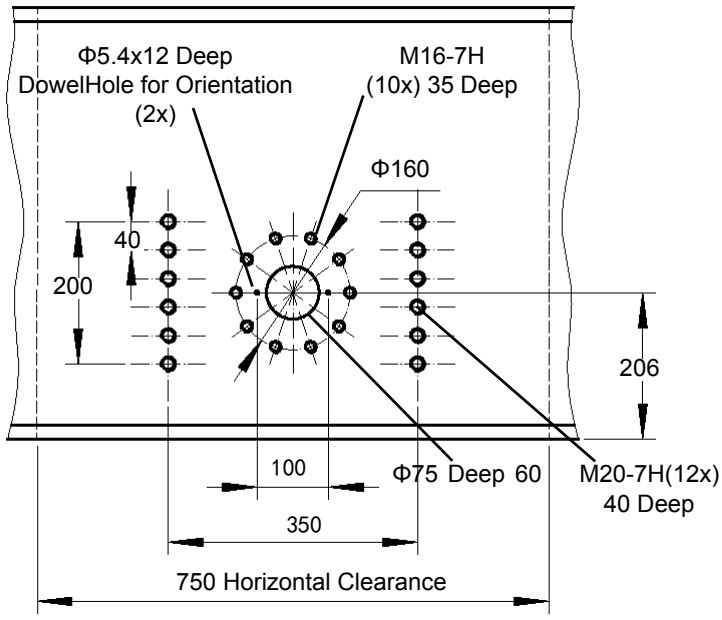

Model C45.605 Base Beam Mounting Dimensions

Crosshead

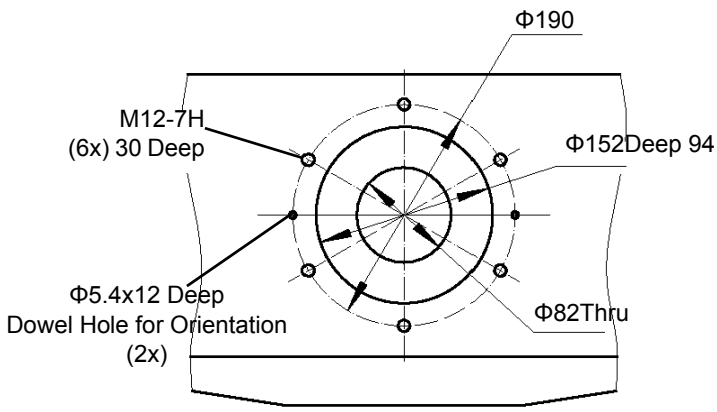

Model C45.605 Topside of Crosshead Mounting

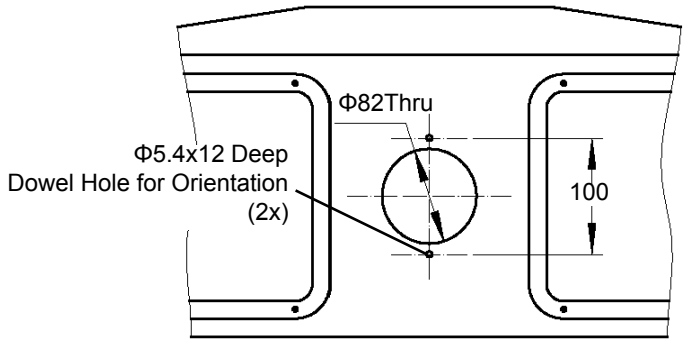

Model C45.605 Underside of Crosshead Mounting Dimensions

Top beam

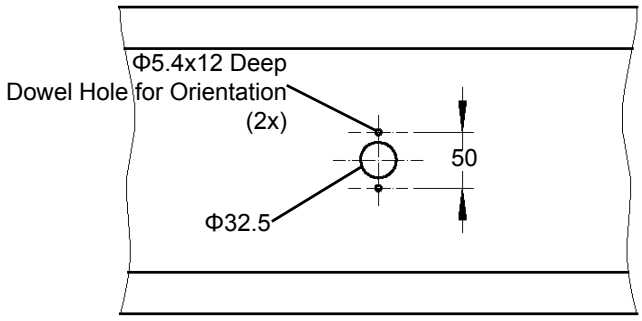

Model C45.605 Underside of Top beam Dimensions

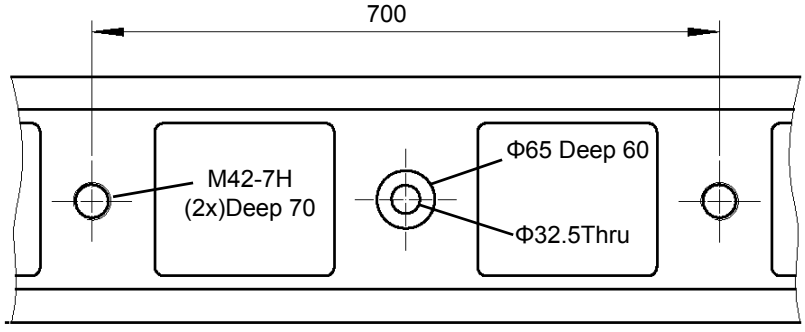

Model C45.605 Upside of Top Beam Dimensions

Operation

This section describes the actions performed during normal, day-to-day operation of the MTS Criterion frame. For information on using the MTS Criterion frame in actual testing, refer to the testing software manual.

Contents

CAUTION

There are rotating parts inside the machine.

Operating the machine without side covers or bellows in place can expose the operator to rotating parts that could cause injury if contact is made.

Do not operate the MTS Criterion test frame without the side covers and bellows in place.

CAUTION

Specimen debris can enter the side covers and puncture bellows.

Material fragments can puncture the bellows and damage the ball screw.

Damaged bellows should be replaced before operating the MTS Criterion Test Frame. Be aware of the potential of material fragments puncturing the bellows and damaging the ball screw, and be aware of the material properties and the hazards generated by the materials during testing. See “General cleaning” on page 118.

WARNING

There are potential hazards during material testing.

Hazards generated by the materials during testing can cause injury or death.

Ensure that only qualified, trained personnel should be allowed to operate the machine. Keep bystanders away during machine operation.

WARNING

A moving crosshead can create a hazardous environment.

Items placed on a crosshead can cause injury when the crosshead moves.

Ensure that nothing is placed on the crosshead before you operate the load frame.

Main Power Switch (I/O) and Emergency-Stop

Main power switch (I/O)

The main power switch is located on the right side of the frame base. Select position **I** to turn the power on to the load frame and the controller. When the power is on, the displays on the frame control panel illuminate. Select position **O** to turn off power to the load frame and the controller.

3-Phase Mains Power Switch

C45.305/C45.605 load frame also has a 3-Phase mains power switch which is located on the right-back side of the frame base. The 3-Phrase main power switch needs to be turned on before the main power switch (I/O) will work properly.

Emergency Stop

The frame is also equipped with an **Emergency Stop** button. The **Emergency-Stop** will cut the power to the motor and should be used for emergency purposes only.

The **Emergency-Stop** should be periodically pressed when the controller is powered but not when a test is running. The controller continously monitors the redundant **Emergency-Stop** chain and will generate a fault alerting the user if any problems are detected. Pressing **Emergency-Stop** allows the active state to be checked.

To shut down the motor power and stop the test program, press the **Emergency-Stop** button. Twist the switch clockwise to release it. Use the **Emergency-Stop** button to shut down your test if something unexpected should happen.

Setting Crosshead Travel Limits

There are two levels of crosshead limit stops that act to protect the crosshead from traveling too far in either direction. The first-level stops are the upper and lower limit stops that you manually set as described below. The second-level limits are not user adjustable and act as a backup in case the first-level limits malfunction.

CAUTION

The limit stops are not intended to end every test.

Repeated use of the limit stops in this way may cause excessive wear, which can result in the limit stop failing to stop the crosshead.

Refer to the Warning below for more information on unexpected crosshead motion. Proper end of test conditions can be set from the software.

Do not use limit stops to end a test.

Crosshead limit stops

WARNING

Unexpected crosshead motion can occur during testing.

Failure to set the limit stops could cause injury from unexpected crosshead motion, and cause possible damage to test fixtures.

Always set the limit stops before starting a test.

Note *Set the crosshead limit stops after you establish the crosshead starting position, but before you start the test.*

The travel limit stops are two adjustable blocks mounted on the limit switch rod, which is located inside the column of the machine. Limit stops have thumbscrews that you tighten and release by hand, and you can move them to any position on the limit rod. Position these stops just beyond the test parameters to prevent crosshead over-travel. When the crosshead reaches the maximum pre-set travel, the limit switch actuator contacts one of these stops. Contact between the limit actuator and the limit stop moves the limit switch rod and activates the limit switches. This stops crosshead motion.

Setting the limit stops

To set the limit stops:

1. Ensure that the crosshead is stationary and that the test parameters are set.
2. Set the upper limit stop at a position just above the expected maximum crosshead travel in the upward direction when tension testing, or just above the test starting point when compression testing. Tighten the stop securely on the limit rod.

3. Set the lower limit stop at a position just below the starting position when tension testing or just below the expected maximum crosshead travel in the down direction when compression testing. Tighten the stop securely on the limit rod.

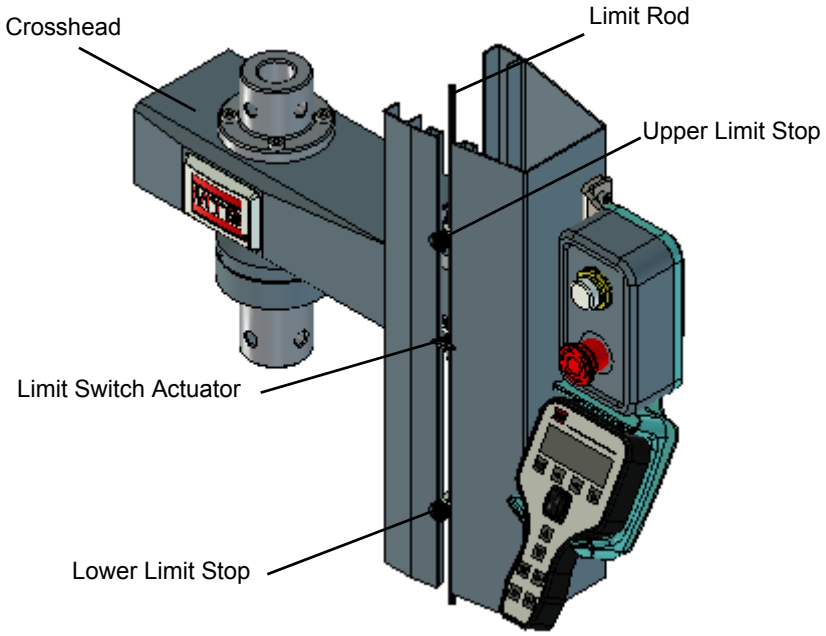

Moving the crosshead

When the crosshead contacts either the upper or lower limit stop, the test stops. If this happens, there are three ways to get the crosshead moving:

CAUTION

Resetting while in a limit disables the hardware interlock and allows motion.

If the hardware has failed, the crosshead could move unexpectedly.

Be aware of the crosshead position after a hardware failure,The hardware is reset as soon as the crosshead has moved out of the limit.

- Press **Motor Reset** in Test MTS TestSuite TW software. Then use the crosshead capabilities of your software (virtual handset). Move the crosshead away from the limit until the switch closes and the crosshead can move in both directions again. See the MTS TestSuite TW software manual for further details.
- Manually move the adjustable limit along the range of travel away from the crosshead until the limit switch is no longer active. Then press **Interlock** in MTS TestSuite TW software or **Handset Enable** on the handset.
- If MTS TestSuite TW software is not active, press **Handset Enable** on the handset. Then use the manual handset control to move the crosshead until the limit switch is no longer active.

Crush Zone Hazards

It is important to stay clear of any potential crush zones when the system is operating. Know where the crush zones are in your system and protect yourself and others from those crush zones with appropriate safety devices. The following paragraphs describe crush zones and precautions to take while working around crush zones.

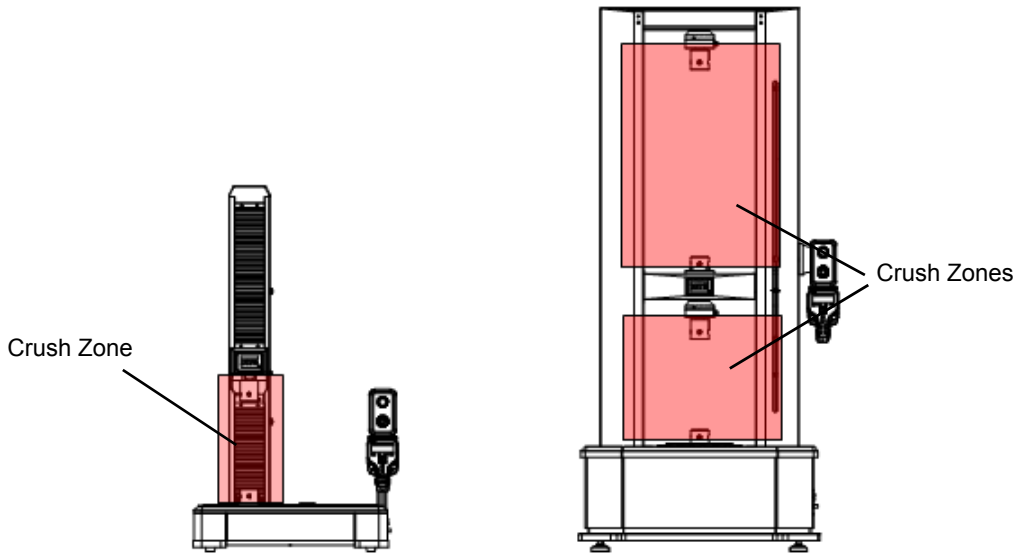

Locations

A crush zone exists between the platen and crosshead on load units where the crosshead and specimen move (both areas are shown).

Precautions

Keep clear of any mechanical linkage that moves within a closed area. If the linkage should move (when the system starts or due to mechanical failure), very high forces can be present that could pinch, cut, or crush anything in the path of linkage movement.

Never allow any part of your body to enter the path of machine movement or to touch moving machinery, linkages, hoses, cables, specimens, and so forth. These present serious crush points or pinch points.

Fixture Mounting

MTS offers a wide variety of fixtures. Mounting these fixtures typically involves installing the fixture or load cell onto a mounting (clevis pin) adapter and securing it with a mounting dowel (pin). To further secure a fixture, some configurations also include locking collars. A typical mounting configuration is shown in the following figure.

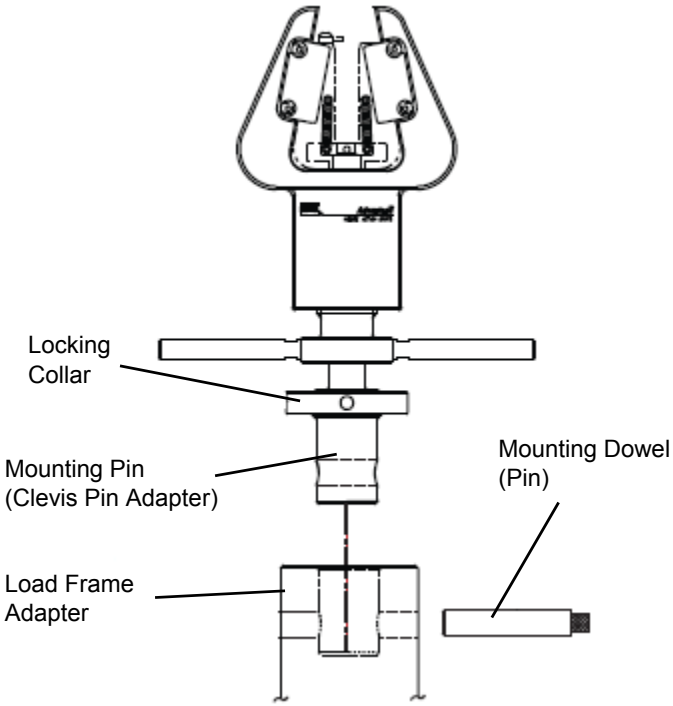

Load Cell Mounting

Mounting load cells typically involves securing the load cell to the frame via a threaded bolt along with associated hardware (in most cases a flat washer, adapter sleeve, and plate assembly). The following figures show the standard mounting configurations. Load cell mounting/adapter bolts should be lubricated with light oil or grease before being assembled and torqued to specifications. See "Load Cell Bolt Torque Specifications" on page 112.

When installing a mounting bolt or an adapter bolt into load cell, check the length of bolt to avoid "bottoming" the bolt in the load cell hole. Doing so will permanently damage the load cell.

On C41 and C42 S-beam style cells, support the grip adapter while torquing the adapter bolt to prevent damaging the load cell from torque twist.

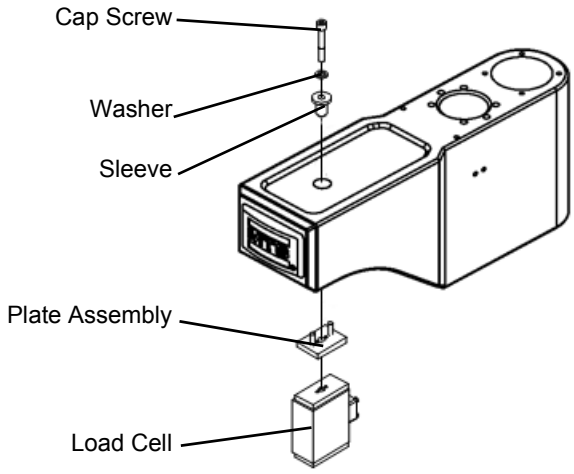

Model C41 1 N–1 kN

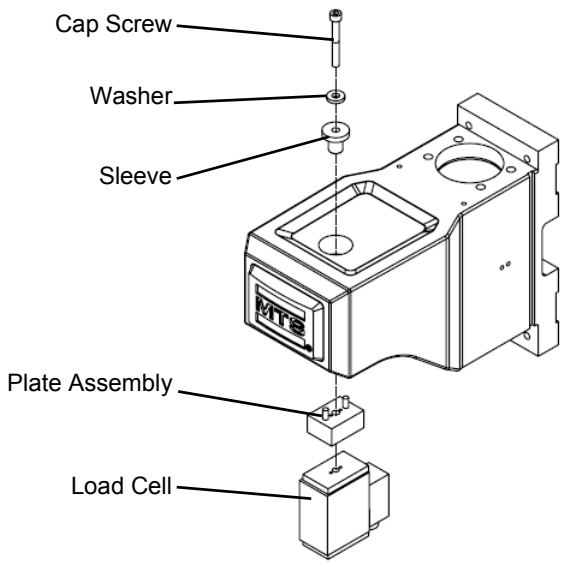

Model C42 1 N–5 kN

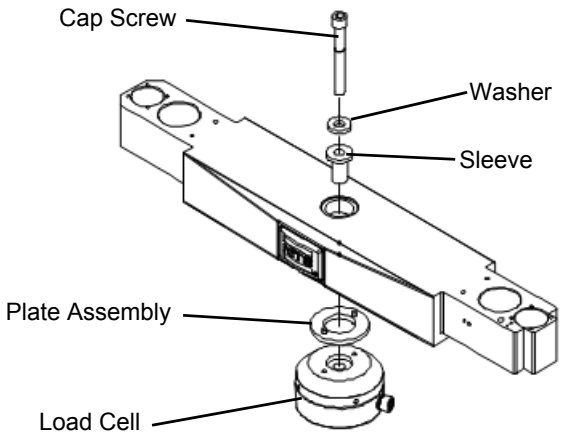

Model C43 10 kN

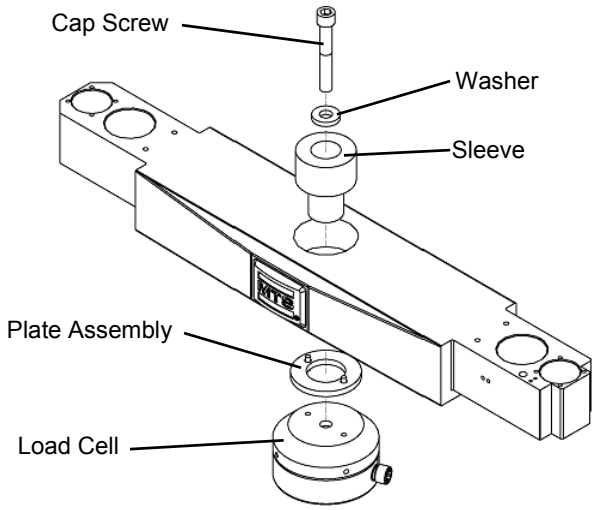

Model C43 20 kN, 30 kN

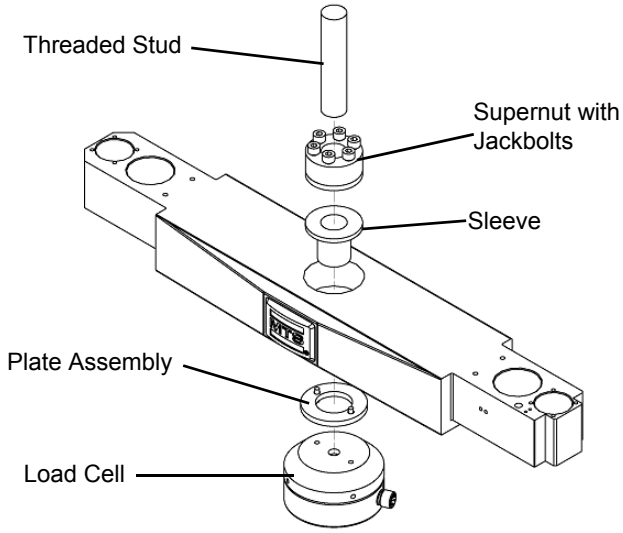

Model C43 50 kN

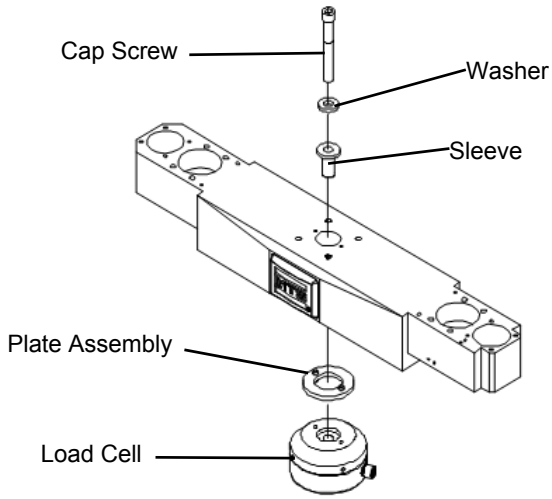

Model C44 10 kN, 20 kN and 30 kN

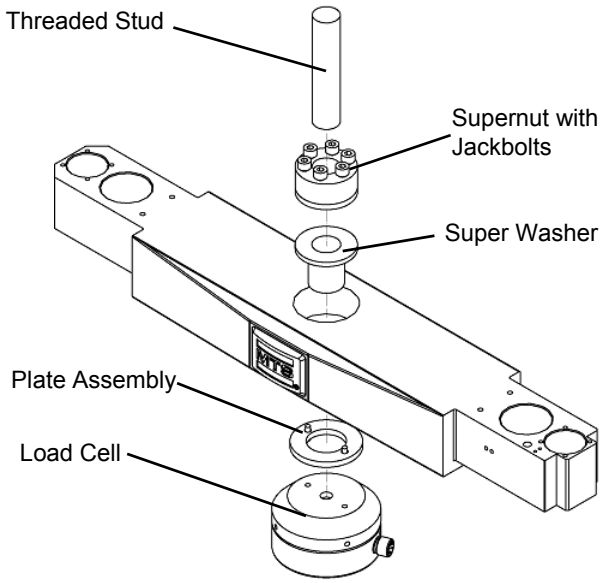

Model C45 50 kN-300 kN

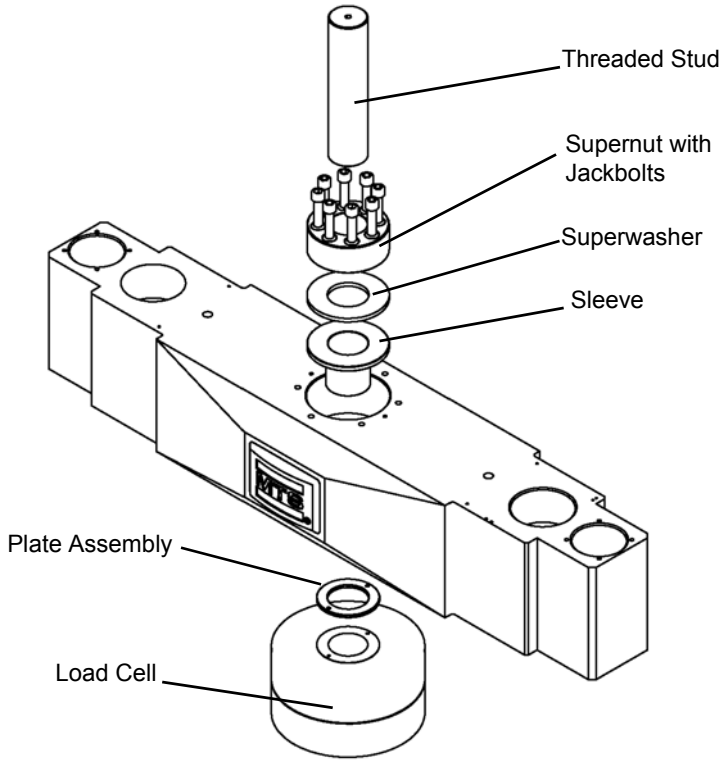

Model C45 500kN,600kN

Load Cell Bolt Torque Specifications

Load Cell	Type	Bolt Thread	Lube and Torque to:	Wrench Size
1 N	S-Beam	M3	5 N•m	M2 hex
5 N-250 N	S-Beam	M6 x 1 mm	5 N•m	M5 hex
500 N-2 kN	S-Beam	M6 x 1 mm	10 N•m	M5 hex
5 kN	S-Beam	M12 x 1.25 mm	20 N•m	M10 hex
100 N- 500 N	Low Profile Bending Beam	M6 x 1 mm	10 N•m	M5 hex
1 kN- 5 kN	Low Profile Shear Beam	M12 x 1.25 mm	20 N•m	M10 hex
10 kN	Low Profile Shear Beam	M12 x 1.25 mm	40 N•m	M10 hex
20 kN	Low Profile Shear Beam	M12 x 1.25 mm	65 N•m	M10 hex
30 kN	Low Profile Shear Beam	M12 x 1.25 mm	90 N•m	M10 hex
50 kN and 100 kN	Low Profile Shear Beam	M27 x 2 mm	27 N•m *	M6 hex
150 kN	Low Profile Shear Beam	M27 x 2 mm	90 N•m *	M10 hex
200 kN and 300 kN	Low Profile Shear Beam	M36 x 2 mm	90 N•m *	M10 hex
500 kN and 600 kN	Low Profile Shear Beam	M72 x 2 mm	170 N•m *	M16 hex

* Torque supernut jackbolts to the torque specified in the table in a crisscross pattern. Bring jackbolts to 33% of full torque, then bring to 66% of full torque, and then to 100% full torque.

Handset Control

The handset has an encoder and buttons to help you during specimen installation and test execution. The handset also has an alphanumeric display and LEDs to provide feedback.

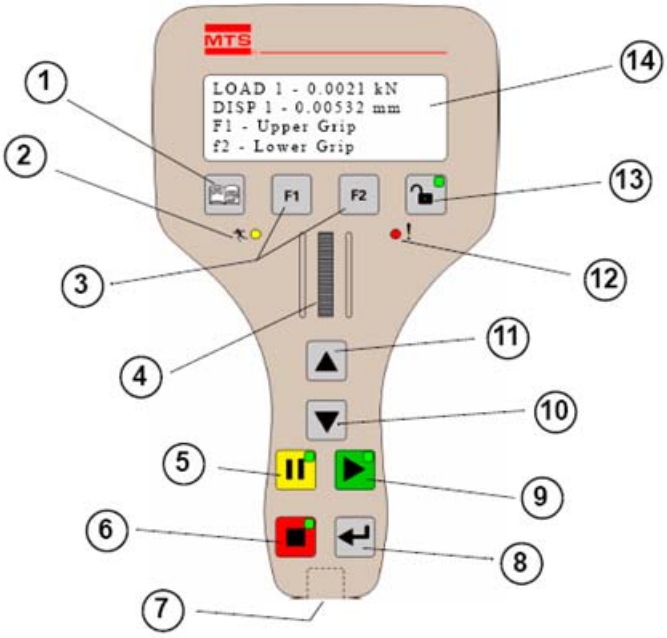

Handset functions

The handset is intended to be used for specimen loading or setup. In some applications, it can be used to completely run a test.

Handset Controls and Indicators (part 1 of 2)

#	Control/Indicator	Description
1	**Page**	Displays the next four lines of text in the display.
2	**Active**	When lit, indicates the system is active (motion is possible).
3	**F1 and F2**	Programmable functions that are set up in the software as digital inputs. This allows you to define the test function (that is, start test, pause, hold position, and so forth).
4	**Thumb-wheel**	Makes fine crosshead adjustment (towards display – up; away from display – down. *Only if Handset Enable is active.*
5	**Pause**	Pauses the test action. This must be pressed again for the test to resume. *Only if the testing software is active.*
6	**Stop**	Stops motion.

Handset Controls and Indicators (part 2 of 2)

7	**Connector**	RJ-45, to Controller.
8	**Crosshead Return**	Returns the crosshead to the original position (zero point).
9	**Start**	Starts the test action. *Only if the testing software is active.*
10	**Crosshead Down**	Moves the crosshead in the downward direction while depressed. *Only if Handset Enable is active.*
11	**Crosshead Up**	Moves the crosshead in the upward direction while depressed. *Only if Handset Enable is active.*
12	**Fault**	When lit, indicates an active fault or interlock.
13	**Handset enable**	Pressing with an interlock active attemps to clear the interlock. Pressing when there are no active interlocks enables the handset for local control. When the indicator is lit, the handset is enabled for control of the crosshead.
14	**Display**	Four lines, 20 characters per line.

Maintenance

Routine Maintenance Overview Checklist

Recommended Service

CALENDAR TIME USING 8 HOURS RUNNING TIME RATE PER DAY	DAILY	WEEKLY	ANNUALLY
RUNNING TIME-HOURS	8	40	2000
Check shunt calibration	X*		
Clean work area/machine surface	X		
Activate and reset limits and Emergency-Stop		X	
Inspect cable/connections		X	
PC Maintenance			
Back up testing software files (*.reg/.cal files)			MTS†
Defragment hard drive			MTS
System Inspection			
Check/adjust drive belt tension (refer to table)			MTS
Inspect drive belts for excessive wear			MTS
Inspect cable connections			MTS
System Checks			
Check Emergency-Stop			MTS
Check upper limit			MTS
Check lower limit			MTS
Check load cal/shunt cal			MTS
Lubrication			
Crosshead/ball screw (#2 white lithium grease)			MTS
Guide column zerk fittings			MTS
Drivetrain bearings (if applicable)			MTS
Frame and Work Area			
Clean off frame and work area			MTS

* Denotes services performed by equipment operators. Most of these procedures involve visual checks that should not interfere with testing system operation. These checks are also completed by trained field service engineers on each Routine Maintenance visit.

† Denotes service performed by trained field service engineers as part of an MTS Routine Maintenance plan. Some of these procedures require special service tools and/or specific service training to complete.

There are no customer−serviceable components on the MTS Criterion frames. Maintenance consists of keeping the frame and work area clean, general inspection, checking interlocks, and scheduled frame calibration.

WARNING

During routine cleaning, detergents can contact electrical components.

Inadvertent electrical component contamination with detergents or cleaning fluids can cause circuits to short resulting in equipment damage.

Be careful not to spill and cleaning liquid on the frame.Disconnect the power cord from the wall outlet before cleaning or inspecting any part of the test frame.

General cleaning

Clean the frame as often as needed. Use a damp, lint-free rag to clean the side covers, base, and crosshead. If necessary, mild detergent or cleaning fluid can be used.

Monthly maintenance

Verify that the **Emergency Stop** button is functioning properly.
Test the limit switches by manually moving the adjustable limits−a limit switch fault should be indicated on the computer screen.
Verify any additional interlocks are functioning properly (for example, the interlock switches on the door of a test area enclosure).

Semiannual maintenance

Verify the speed and position accuracy of the frame. This requires standards and other equipment typically not available for routine maintenance. Contact your MTS field service engineer for assistance.

Removing mats

Some installation and maintenance situations may require you to remove the load frame mat covers in order to access components within the base of machine.
To remove the mat of the C41and C42 model:

1. Using a ball-end 5 mm hex driver, remove the two M6 bolts holding the upper horizontal aluminum extrusion on the rear guard and remove the extrusion.
2. Remove the upper profile from the safety enclosure frame.
3. Gently remove the clear polycarbonate from the safety enclosure and place it in a safe place.
4. Use the ball-end 5 mm hex key driver to loosen the two M6 bolt connectors on the lower horizontal aluminum extrusion.
5. Remove the lower profile from the safety enclosure frame.
6. Open the front door, and carefully remove the rubber mat, as the rubber mat can tear at the corners.

To install the mat, perform the procedures in reverse.

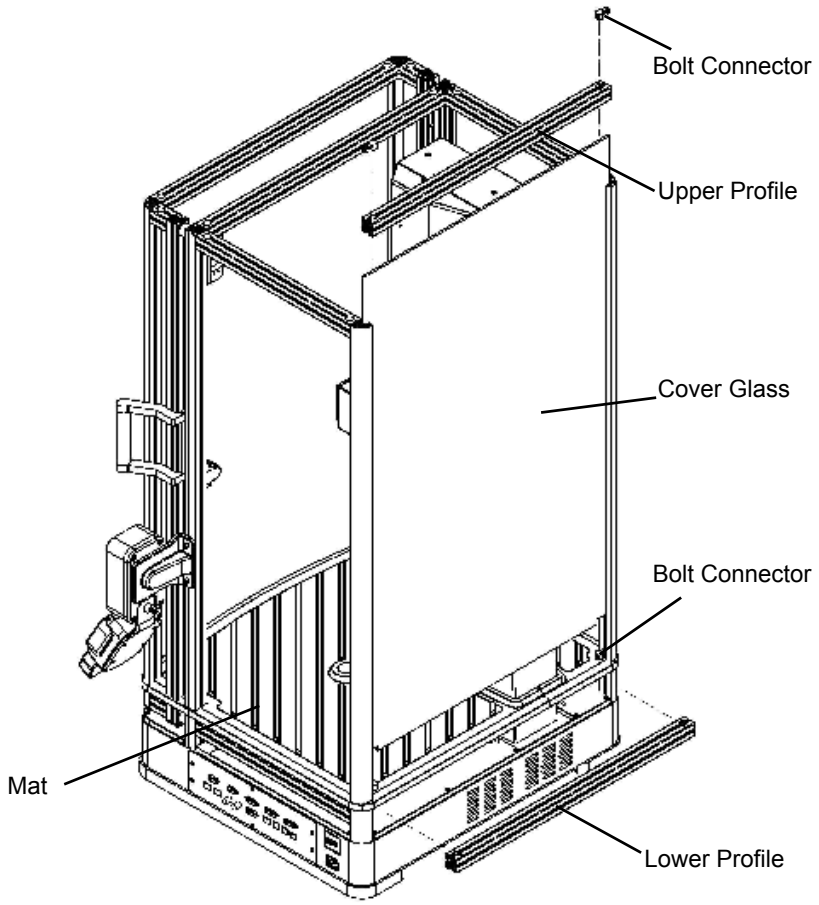

Removing the Mat of C42 Model

Other service

Regular inspection and service of the drive motor system and crosshead positioning components are needed to prolong the life of your frame and keep it performing optimally. This type of service is typically preformed by MTS field service engineers or MTS authorized service representative. Contact your MTS authorized representative for additional information.

Note *MTS offers annual maintenance and calibration plans. Contact your sales representative for more information.*

Troubleshooting

Basic Troubleshooting

SYMPTOMS	SOLUTIONS
Failure in Windows system	Turn off the computer and start again. If the problem still exists, ask your IT Department to check into the problem. If your IT Department can not solve the issue, delete the current Windows system and install it again. If after the re-install the issue still exists, contact the local service center of the computer manufacturer directly, or via MTS China, to repair the computer.
Testing software failure	Displacement cannot be cleared or displayed. Normally, it is caused by an incorrect sequence in turning on the testing system; shut off the software and restart it. If restarting does not solve the problem, delete the testing software, and install the software again.
Communication trouble between hardware and software	Check all cable connections. If communication between the PC and the MTS Criterion system are not working try the following: • Remove the USB connector from the MTS Criterion system and plug it back in and see if communications starts between the two. • Shut off power to the MTS Criterion system and turn it on again, see if communication starts between the two.
Power OK light not on when power switch is on	Check that: • The power cable is plugged in. • The line voltage is within specified machine limits.
Cannot clear interlocks	Check: • If **Emergency Stop** is active. • For system interlocks (servo error, limits). • For system faults.

Decommissioning

The decommissioning process is performed when the system is going to be moved or taken out of service. Disassembly is required when performing either of these tasks.

To decommission the system:

1. Remove specimen and fixtures. Large grips should be removed if the load frame could be tipped over.
2. Isolate the system from electrical power.
3. When the system electronics, control software, and the system PC are powered down, turn off the system's main electrical supply and disconnect all cables.
4. Disconnect all cables from the controller.
5. Cover the material testing machine with a dust cover, such as plastic foil. Allow for sufficient ventilation or place a dehumidifier near to the equipment.
6. Place the accessories and the instruction manual in a clean, dust-protected place, such as a tool cabinet.

CAUTION

Electrical components and parts can contain hazardous chemicals and compounds.

These chemicals and compounds can cause environmental problems. Always refer to local codes that govern the disposal of potentially hazardous materials and follow these codes for the proper handling and disposal of these materials.

Follow internal safety policies for safe disposal of parts of the machine. Refer to MSDS for oils and greases that are used on the machine.

Appendix

Additional Digital I/O Information

The digital inputs have an MOCD223 optical isolator with 2.7 Kohm, ½ Watt series resistor. To reliably turn on, they need 1 mA of current. This means the minimum input high voltage is 4.0 V DC. The maximum input voltage is 28.0 V DC. The device should be off for input voltages less than 1.0 V.

The digital outputs are implemented by an AQV252G PhotoMOS relay with a 0.75 Amp poly fuse in series. Although the device is rated at 60 V peak, it is recommended that a maximum of 48 V be applied. If the load is highly inductive, such as a relay coil, an appropriate snubber network should be used near the coil terminals to prevent large flyback voltages from exceeding the device ratings.

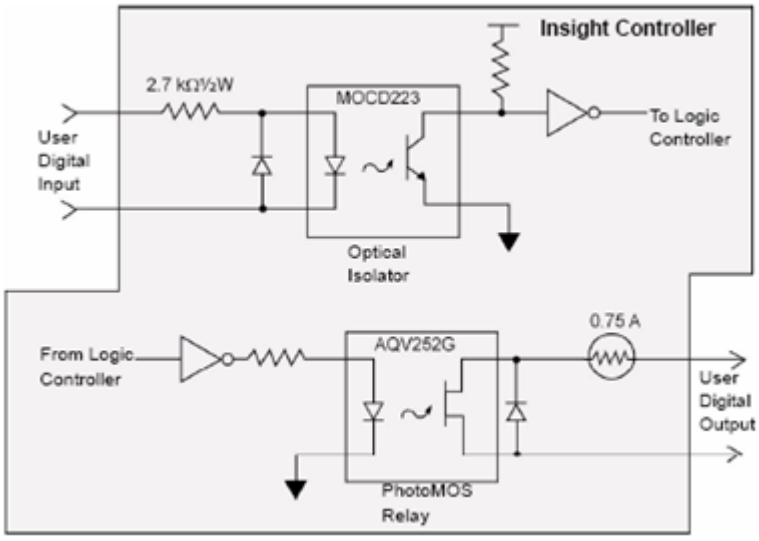

A typical example might be connecting an external switch.

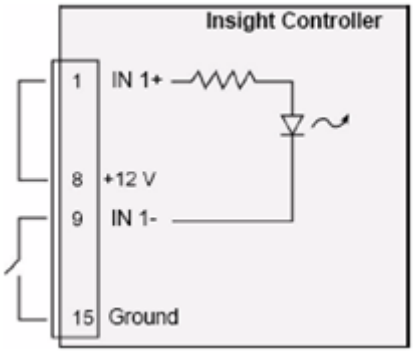

Electromechanical Load Unit Maintenance and Service Logs

Contents

8 Hours/Daily

8 Hours/Daily Service Interval Recommendation

	SHUNT CALIBRATION CHECK	CLEAN WORK AREA MACHINE SURFACE	
DATE	PERFORMED BY	PERFORMED BY	NOTES

40 Hours/Weekly

40 Hours/Weekly Service Interval Recommendation

	VERIFY LIMITS AND EMERGENCY-STOP	INSPECT CABLE/ CONNECTIONS	
DATE	PERFORMED BY	PERFORMED BY	NOTES

2000 Hours

PC Maintenance and System Inspection

2000 Hours/Annual Service Interval Recommendation

	PC Maintenance		System Inspection			
	Back up testing software files (*.Reg/.Cal Files)	Hard drive defragment	Inspect/clean controller	Inspect drive belts for excessive wear	Inspect cable connections	
Date	Performed by	Performed by	Performed by	Performed by	Performed by	Notes

2000 Hours

System Checks

2000 Hours/Annual Service Interval Recommendation

	System Checks				
	Check Emergency-stop	Check upper limit	Check lower limit	Check load cal/shunt cal	
Date	Performed by	Performed by	Performed by	Performed by	Notes

2000 Hours

Lubrication

2000 Hours/Annual Service Interval Recommendation

	LUBRICATION			
	CROSSHEAD/BALL SCREW (# WHITE LITHUM GREASE)	BEARING IN BASE PLATE (# WHITE LITHUM GREASE)	DRIVE TRAIN BEARINGS (IF APPLICABLE)	
DATE	PERFORMED BY	PERFORMED BY	PERFORMED BY	NOTES

2000 Hours

Frame and Work Area

2000 Hours/Annual Service Interval Recommendation

	FRAME AND WORK AREA			
	CLEAN/REPLACE AIR FILTER	CLEAN GUIDE COLUMNS WITH WD40 (D/G/S SERIES FRAMES)	CLEAN OFF FRAME AND WORK AREA	
DATE	PERFORMED BY	PERFORMED BY	PERFORMED BY	NOTES

Declaration of Conformity

MTS Systems Corporation
14000 Technology Drive
Eden Prairie, MN 55344-2290
Telephone 952-937-4000
Fax 952-937-4515

ORIGINAL

DECLARATION OF CONFORMITY IN ACCORDANCE WITH ANNEX II 1A OF COUNCIL DIRECTIVE 2006/42/EC	
Equipment Identification:	
CRITERION 40 MATERIAL TESTING SYSTEMS	**Serial No. (select one only)**
C41	
C42, C42EL	
C43, C43EL	
C44, C44EL	
C45, C45EL, C45W	
Optional Equipment Name / Model	**Serial No. (or other similar identification. If Serial No. or identification is not available, then check X to denote delivery)**
Test Area Guard	
634.XX extensometer	
632.XX extensometer	
LX laser extensometer	
xLT Hi elongation extensometer	
Temposonics	
661.XX Load cell	
662.XX Load cell	
663.XX Torque cell	
660.2X Load cell	
660.2X delta P cell	
Fundamental Environmental Chamber	
658 Enviro Bath	
652.XX Hi-temperature furnace	
653.XX Hi-temperature furnace	
409 Temperature Controller	
647.XX Hydraulic wedge grips	
643.XX compression platens	
642.XX bend fixture	
640.XX fracture mechanics grip	
Advantage Pneumatic grip	
Advantage screw action grip	
Advantage wedge grip	
Fundamental Bollard grip	
Fundamental Cord / yarn grip	
Fundamental Roller grip	
Fundamental Scissors grip	
Fundamental Vise grip	
Advantage and Fundamental Pneumatic grip controller	
Fundamental Compression Plates	
Fundamental Bend Fixtures	
Fundamental Wedge Grips	
Fundamental Hi-Temperature Furnace	
Fundamental Hydraulic Side-Action Grips	

Page 1 of 2 DoC Criterion 40 July 22 2014

Equipment Description: The MTS CRITERION 40 MATERIAL TESTING SYSTEMS (C41, C42, C43, C44 AND C45) 50 N to 600 kN with TestWorks Software is intended to perform testing of materials and components, including plastics, metals, composites, adhesives , textiles, wood and paper products, ceramics, elastomers, and foam. Includes the following sub-systems of the machine: Frame, Motor, Amplifier, Controller, Handset and Cables. Customer must evaluate risks due to ejected parts or materials from the test specimens. If Test Area Guard is not selected by customer, then for protection against ejected parts or materials from test specimens and to control access to the machinery, the Customer must provide a Test Area Guard to protect personnel.	
Manufacturer: MTS Systems Corporation 14000 Technology Drive Eden Prairie, MN 55344-2290, U.S.A.	
Authorized Representative: Martin Smaller MTS Systems Ltd Brook House, Somerford Court Somerford Road Cirencester GL7 1TW Glos. - UK	
Applicable Directive(s): Machinery Safety Directive 2006/42/EC Low Voltage Directive 2006/95/EC EMC Directive 2004/108/EC	
Harmonized or Other Standards Referenced: EN ISO 12100 Safety of machinery – General principles for design – Risk assessment and risk reduction EN 61010-1: Safety requirements for electrical equipment for measurement, control and laboratory use, Part 1: General requirements EN 61326-1: Electrical equipment for measurement, control and laboratory use EMC requirements Part 1: General requirements EN 55011 Industrial, scientific and medical (ISM) radio-frequency equipment — Electromagnetic disturbance characteristics — Limits and methods of measurement Group 1: class A (non-domestic where RF is NOT used in the treatment of material)	
Technical Construction File in accordance with Annex VII Part A: A copy (electronic and paper) of the Technical Construction File for this machinery is available on request from: Authorized Representative	
We, MTS Systems Corporation, hereby declare that the machinery described above conforms with the relevant provisions of Annex I Essential Health and Safety Requirements of Directive 2006/42/EC and that the Annex VIII Conformity Assessment Procedure has been carried out.	
Place of Issue:	Eden Prairie, MN 55344, USA
Date of Issue:	
Signature:	
Name and Title:	Grant Ovsak - Vice President (Global Engineering)

Page 2 of 2 DoC Criterion 40 July 22 2014

MTS Systems Corporation
http://www.mts.com/en/Global/index.asp

ISO 9001 Certified QMS